Dezctop

UNDER DESK PC MOUNT

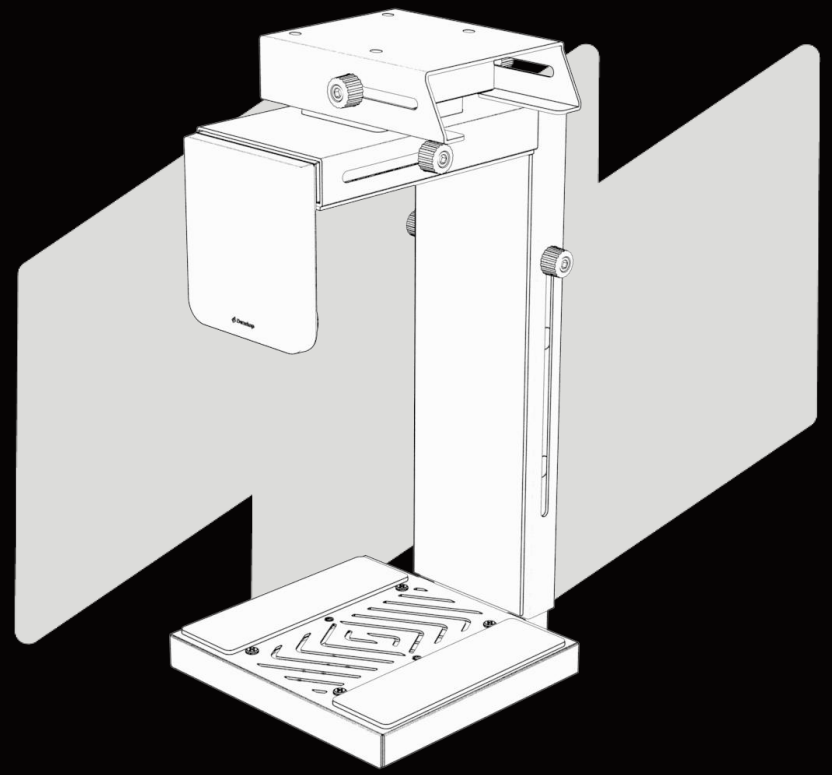

User Guide

TABLE OF CONTENTS

01 Overview p.02

02 Dimensions p.04

03 Component List p.10

04 Desk, Brackets And Required Tools p.13

05 Mount The Brackets p.15

06 Install The PC Mount p.44

01

Overview

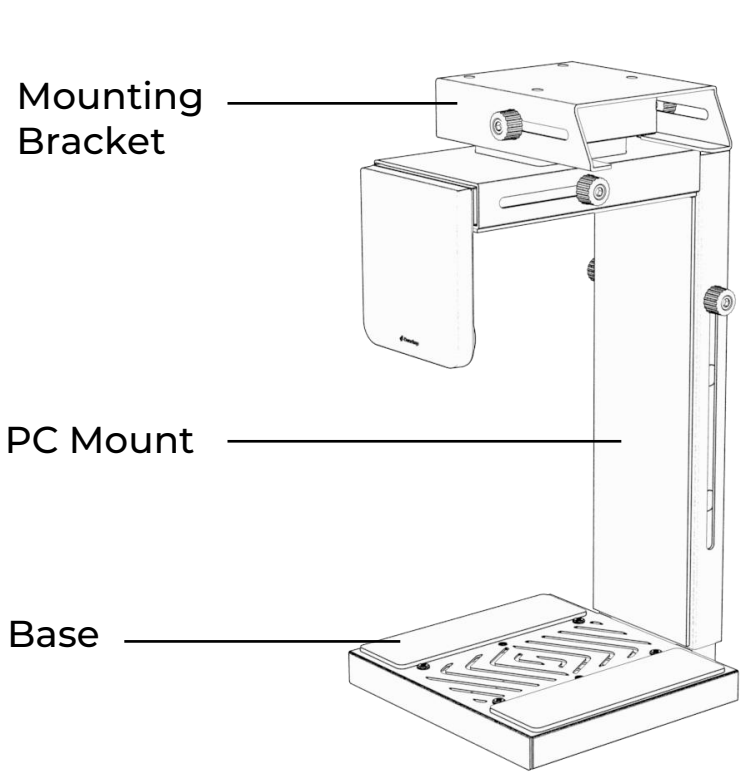
Mounting Bracket
PC Mount
Base

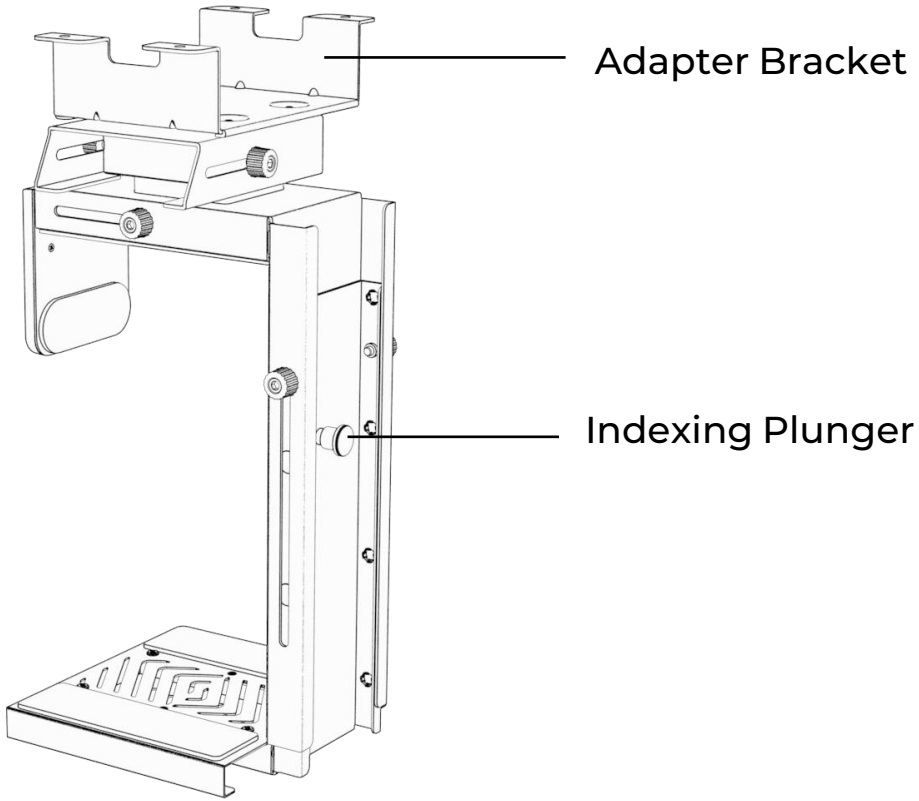
Adapter Bracket
Indexing Plunger

02

Dimensions

Mounting Bracket

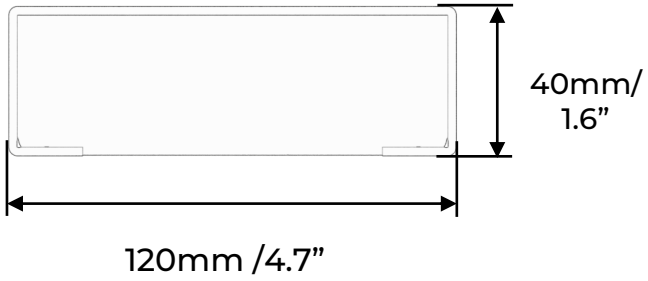

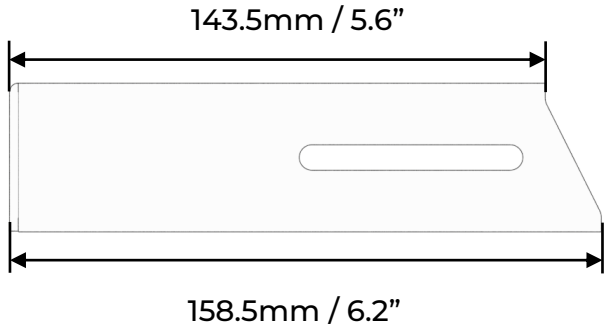

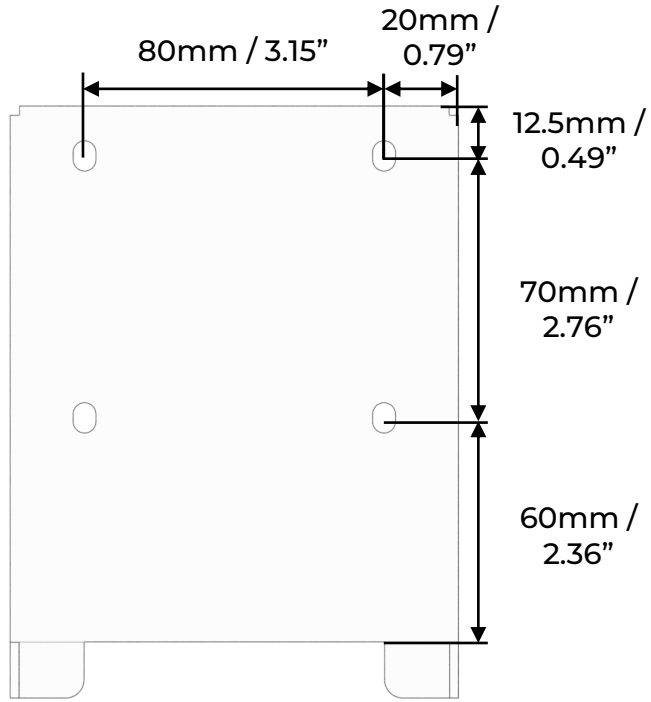

Adapter Bracket

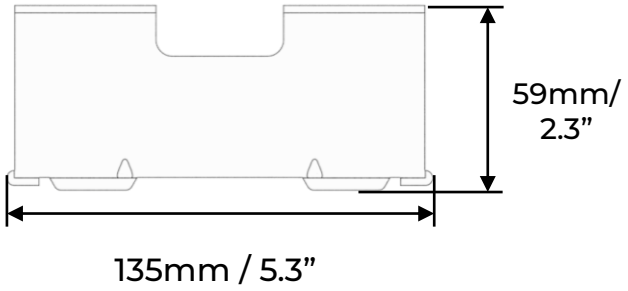

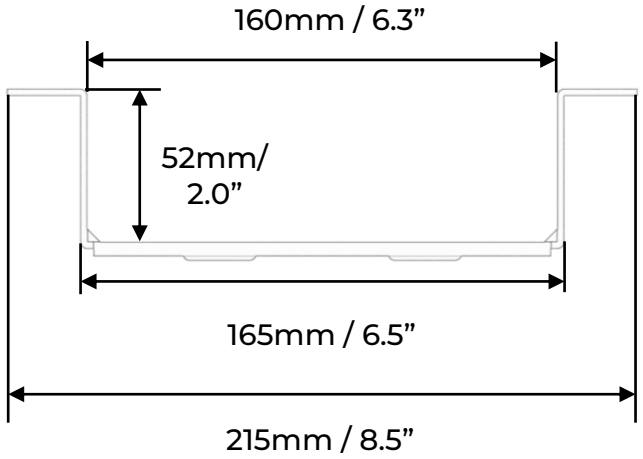

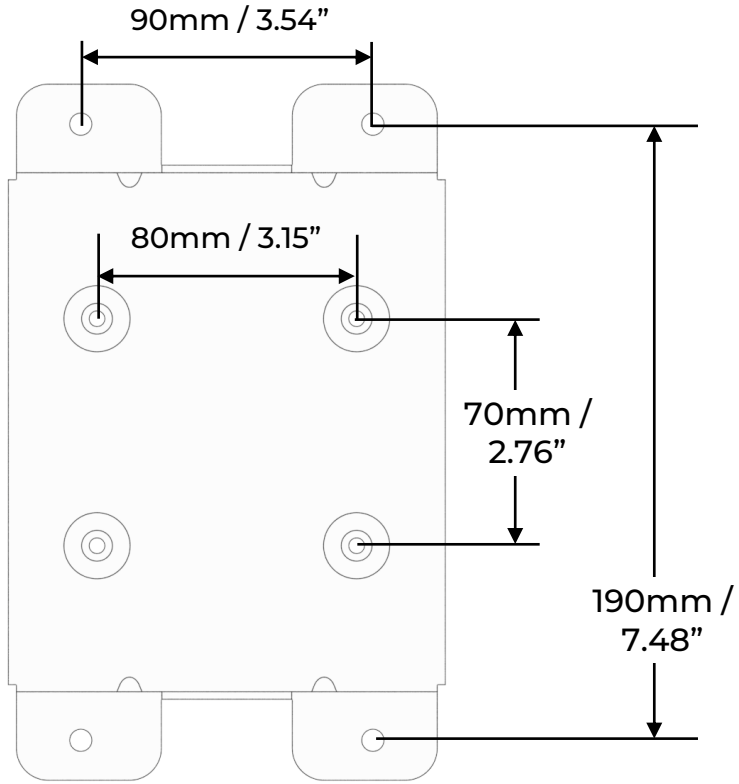

PC Mount
(With Mounting Bracket)

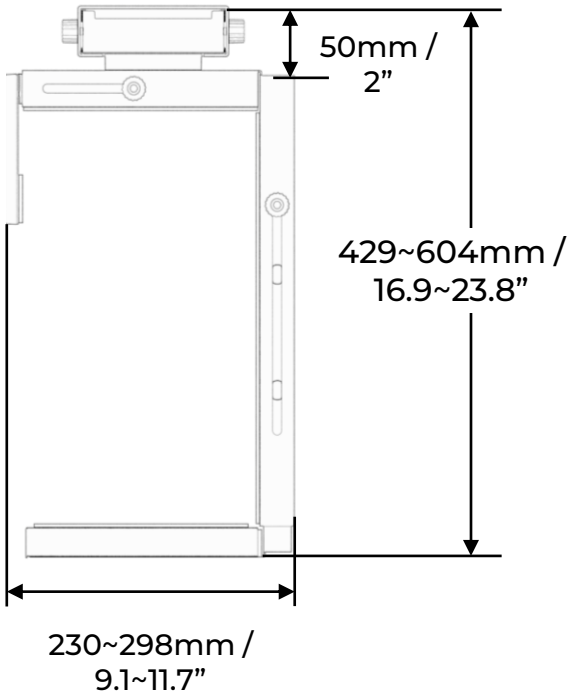

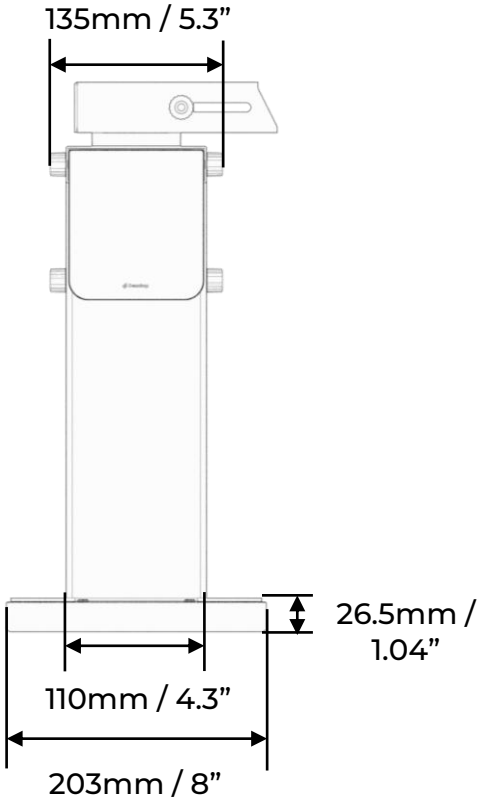

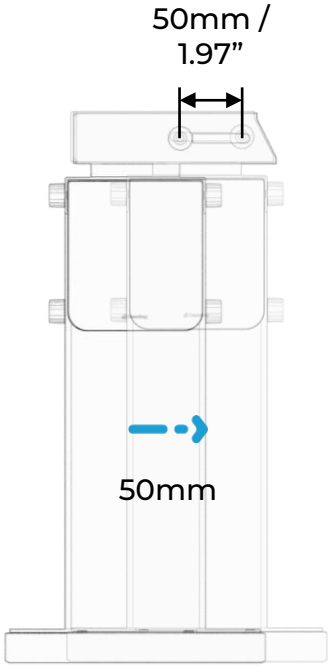

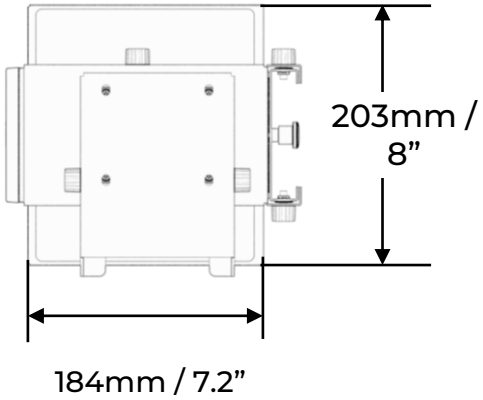

PC Mount With Mounting & Adapter Bracket

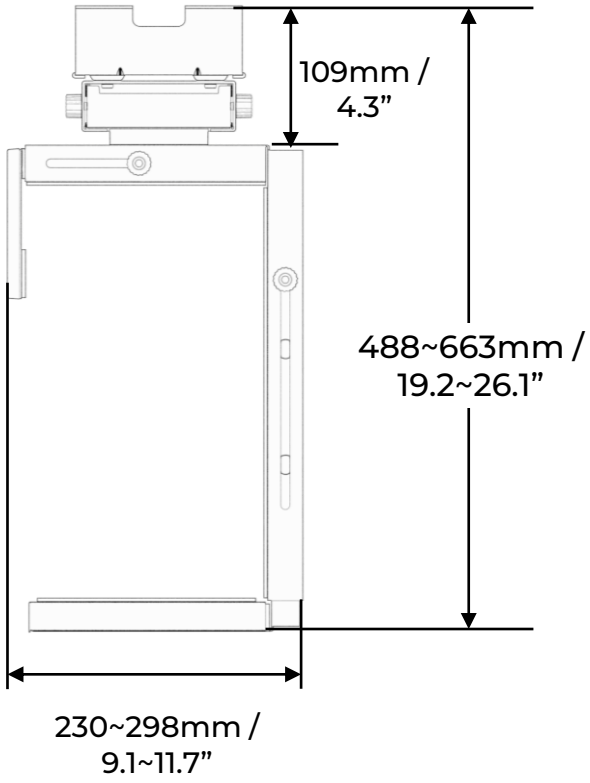

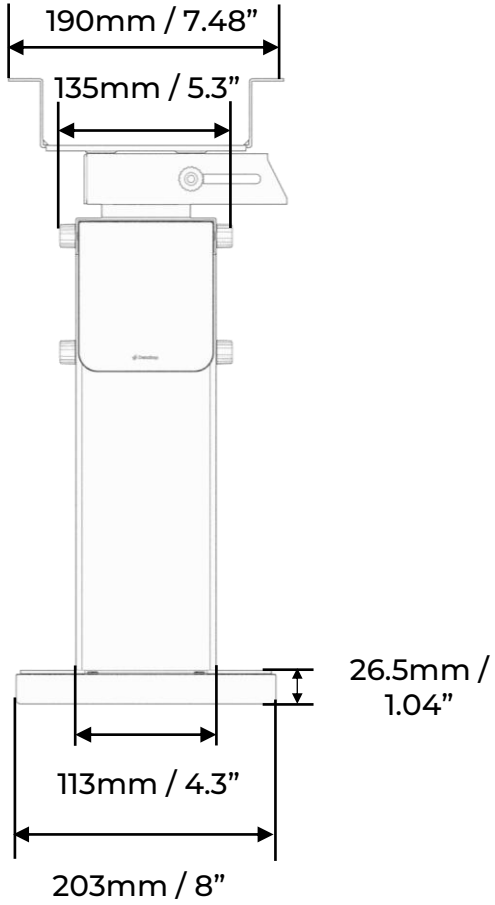

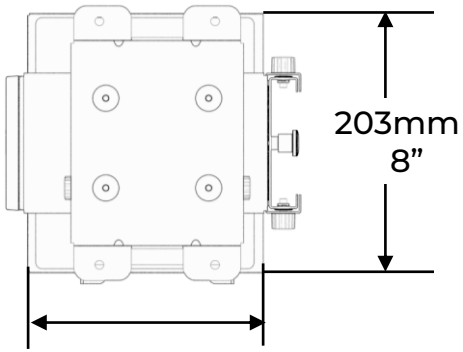

Compatible Cases' Dimensions

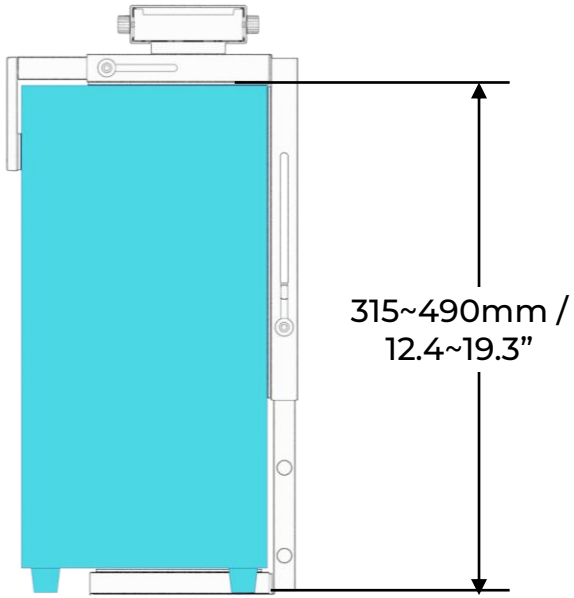

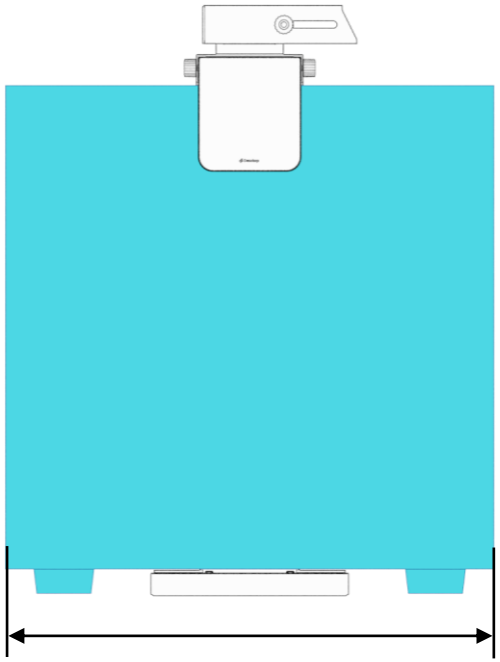

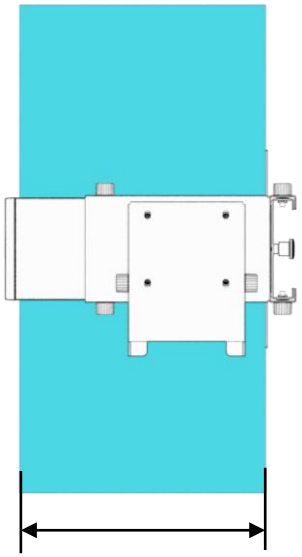

03

Component List

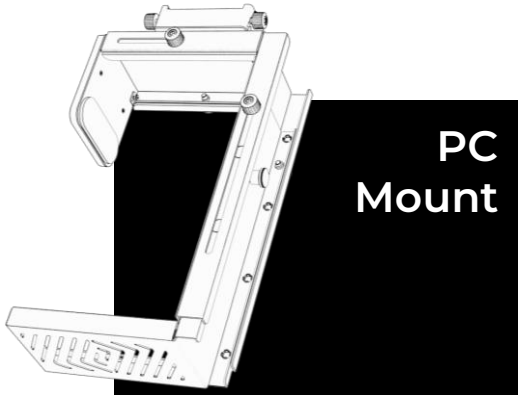

PC Mount

X 1

A

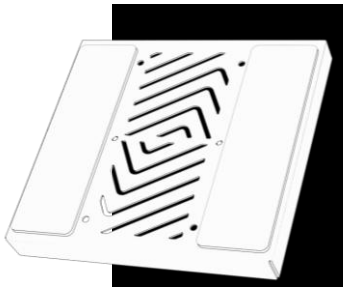

Base

X 1

B

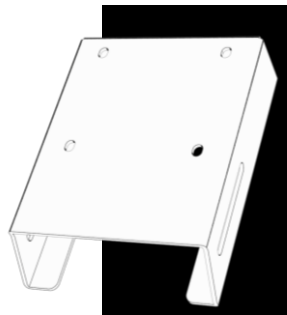

Mounting Bracket

X 1

C

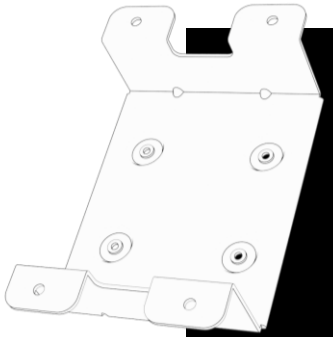

Adapter Bracket

X 1

D

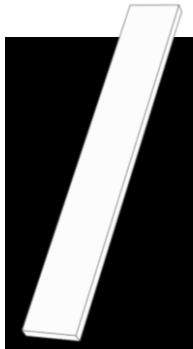

EVA Foam

X 2

E

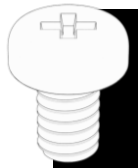

M5x8 Screw

X 4

F

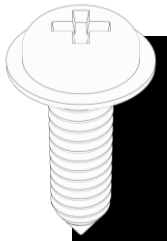

G

M5x16
Self-Tapping
Screw

X 4

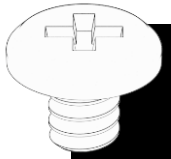

H

M4x8
Screw

X 4

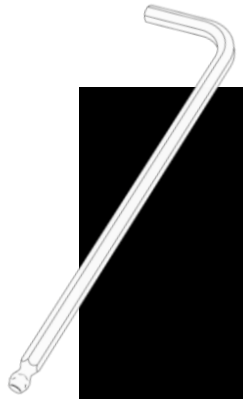

I

5mm
Hex Key

X 1

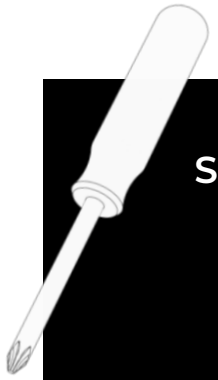

J

Cross
Screwdriver

X 1

K

Foam
Spacer
Block

X 1

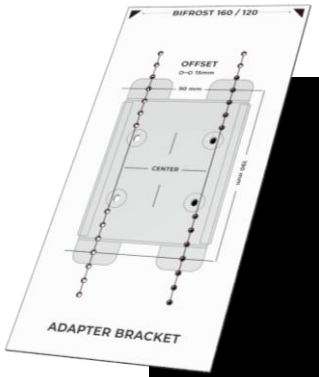

L

Alignment
Paper

X 1

04

Desk, Brackets And Additional Tools

	Dezctop Revon Desks	Dezctop Bifrost Elite / Pro & General Standing Desks	Dezctop Bifrost 160 / 120 Desks	Other Desks
Desks		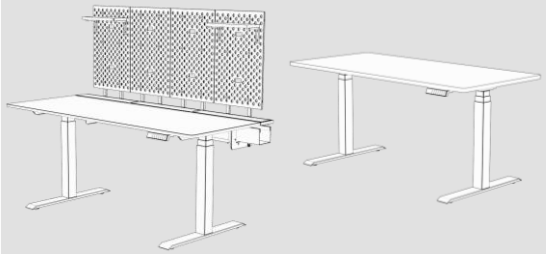		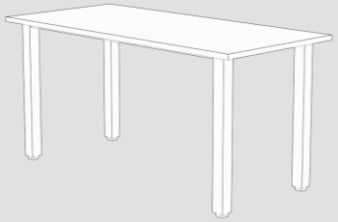
Brackets	Mounting Bracket	Mounting Bracket	Adapter Bracket 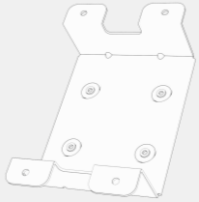	Mounting Bracket
Additional Tools (Not Included In The Components)	Electric Screwdriver (Recommended)	Electric Drill / Screwdriver	3.5mm Drill Bit	Marker Pen

05

Mount The Brackets

5.1 On Dezctop Revon Desks P.17

5.2 On Dezctop Bifrost Elite/ Pro and General Standing Desks P.21

5.3 On Dezctop Bifrost 160/ 120 Desks P.29

5.4 On Other Desks P.37

5.1 On Dezctop Revon Desks
5.2 On Dezctop Bifrost Elite / Pro and General Standing Desks
5.3 On Dezctop Bifrost 160 / 120 Desks
5.4 On Other Desks

Reserved Mounting Holes of Revon Desks

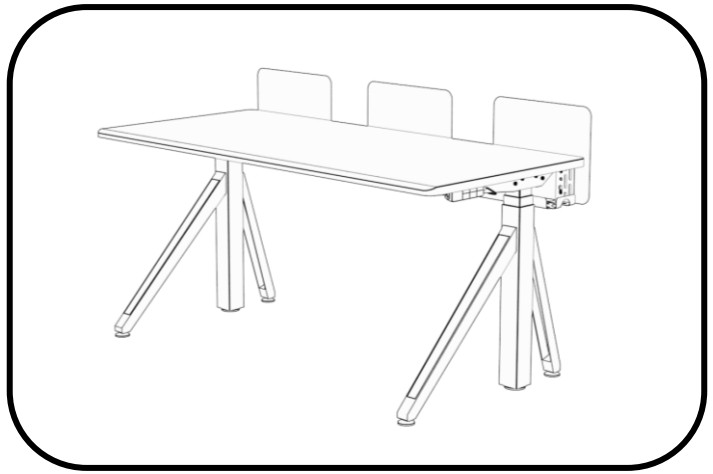

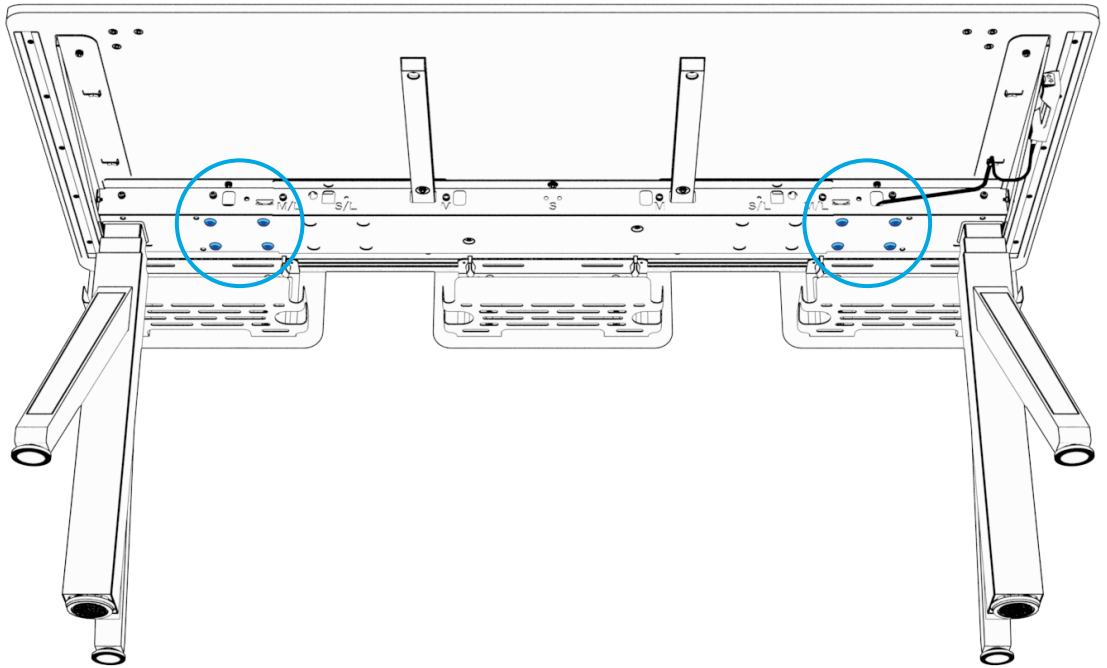

5.1 On Dezctop Revon Desks
5.2 On Dezctop Bifrost Elite / Pro and General Standing Desks
5.3 On Dezctop Bifrost 160 / 120 Desks
5.4 On Other Desks

Reserved Mounting Holes of Revon Desks

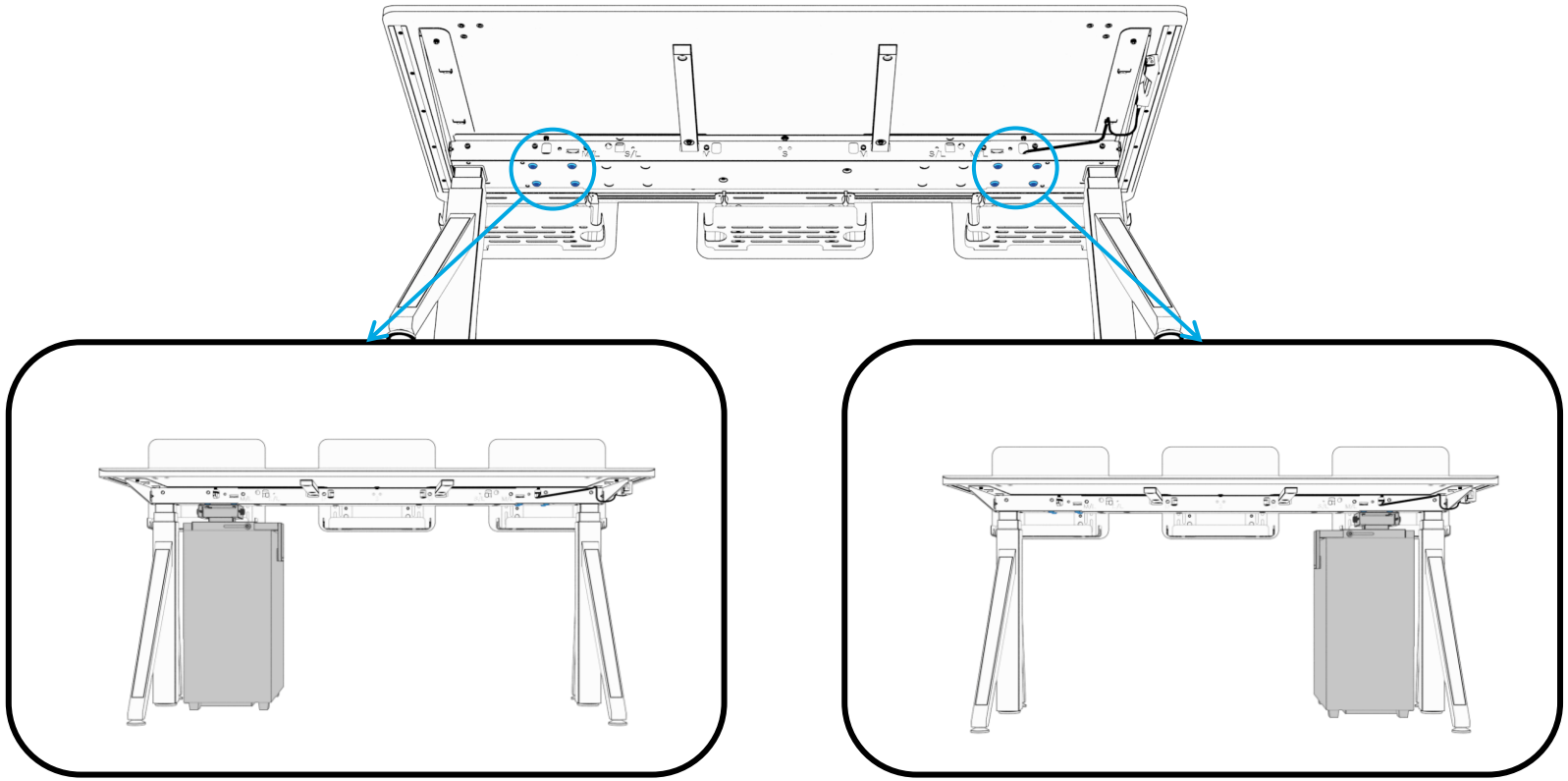

5.1 On Dezctop Revon Desks | 5.2 On Dezctop Bifrost Elite / Pro and General Standing Desks | 5.3 On Dezctop Bifrost 160 / 120 Desks | 5.4 On Other Desks

Mount The Mounting Bracket

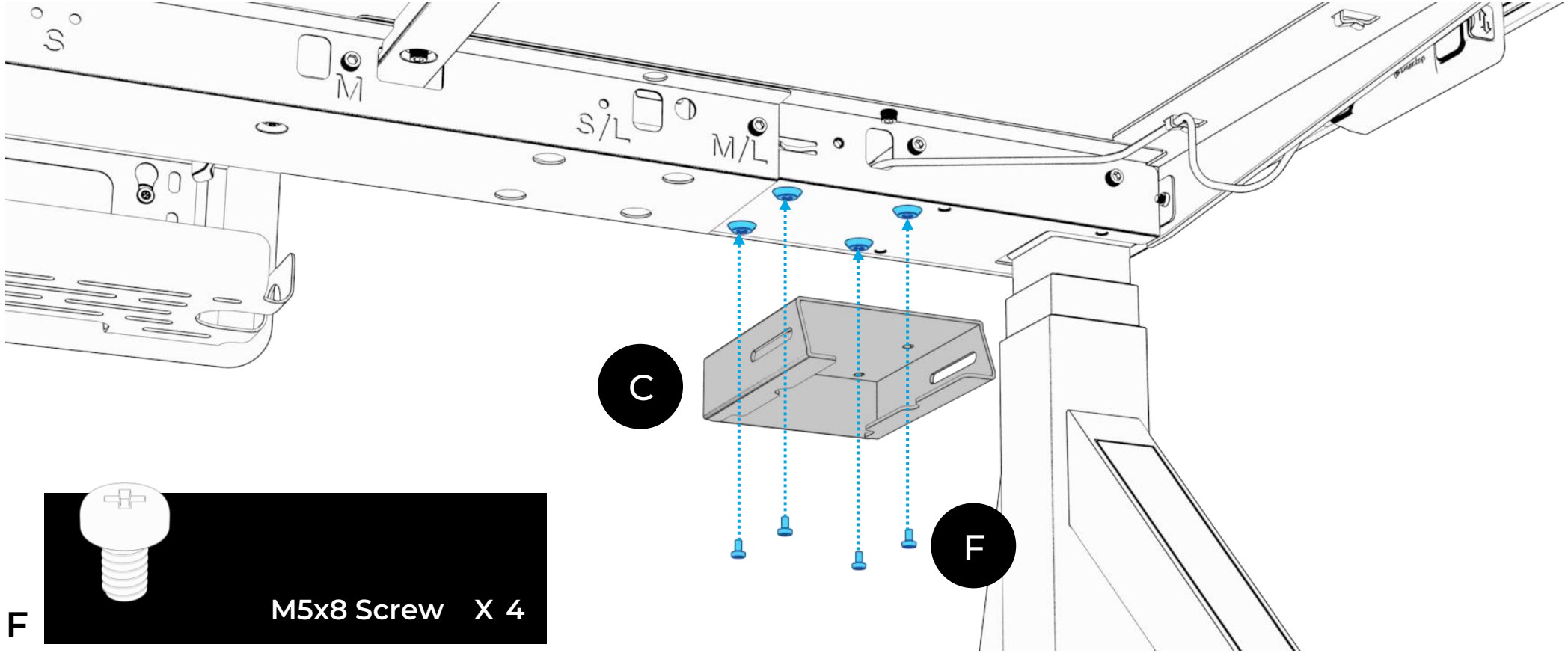

F

5.1 On Dezctop Revon Desks
5.2 On Dezctop Bifrost Elite / Pro and General Standing Desks
5.3 On Dezctop Bifrost 160 / 120 Desks
5.4 On Other Desks

Mount The Mounting Bracket

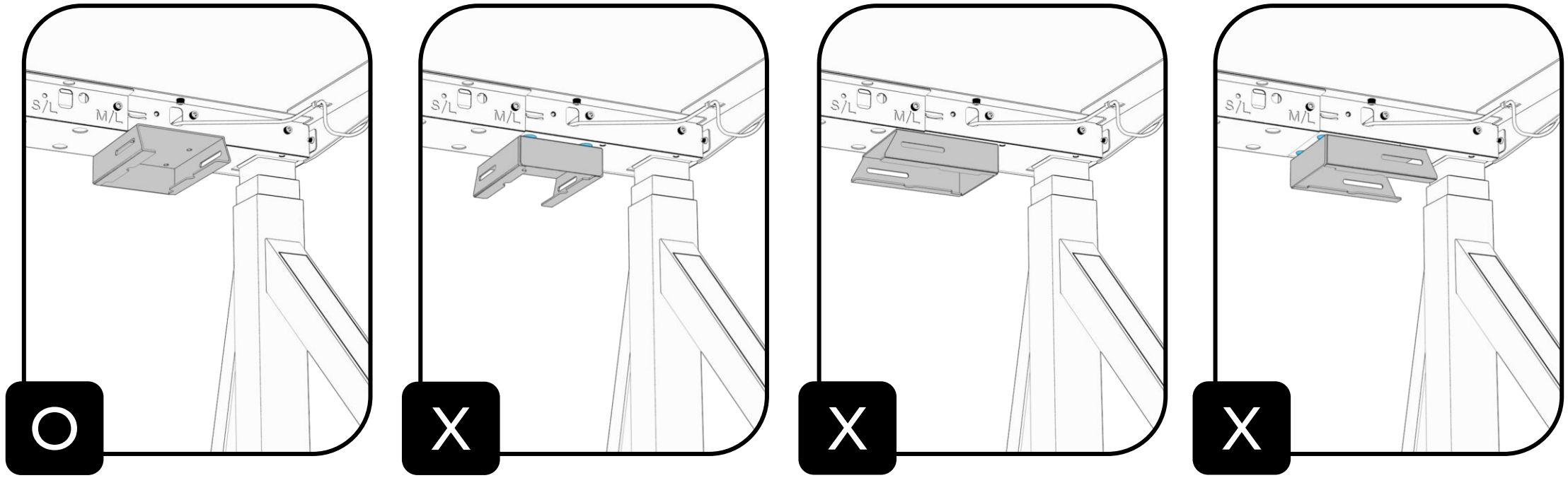

Across The Underframe And By The Leg

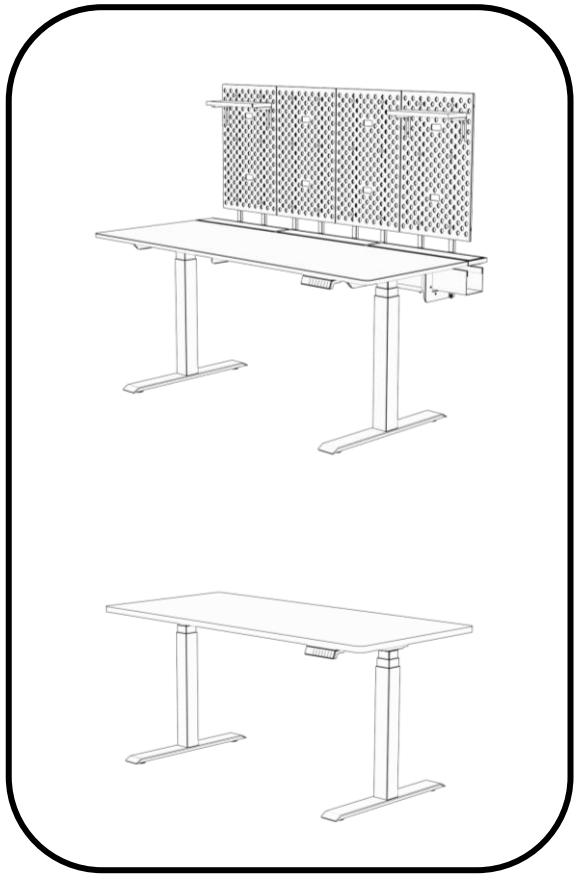

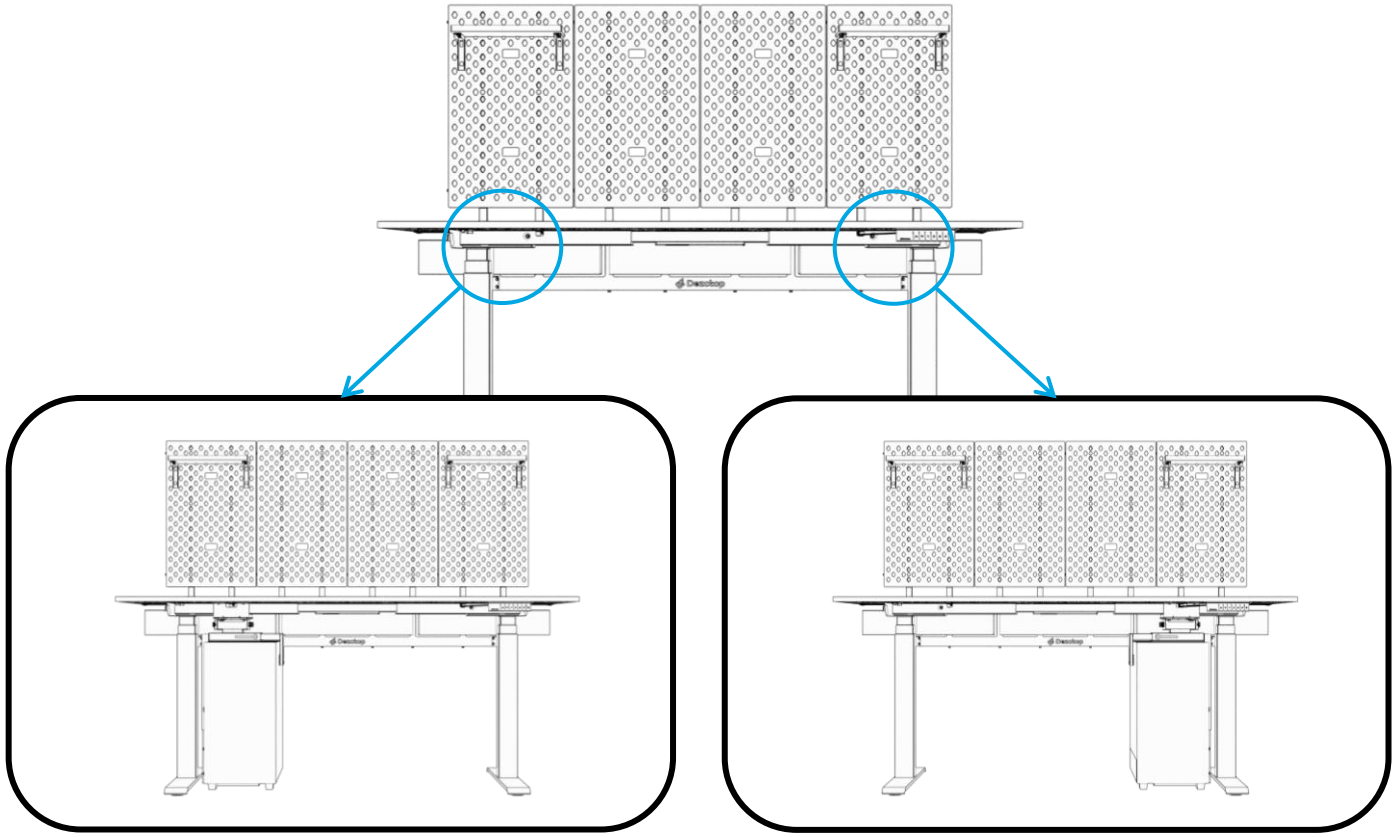

Stick The Foam Spacer Block

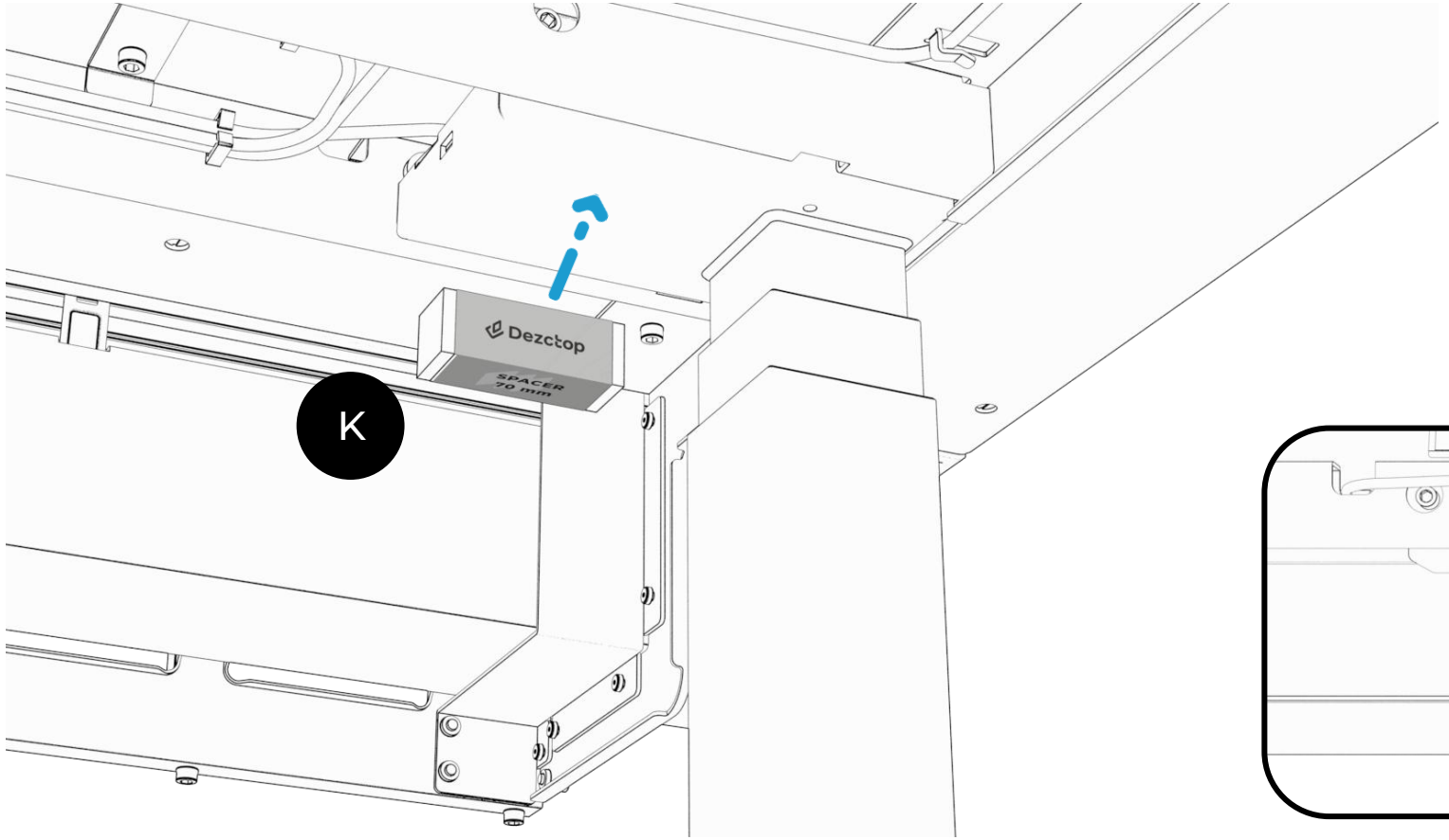

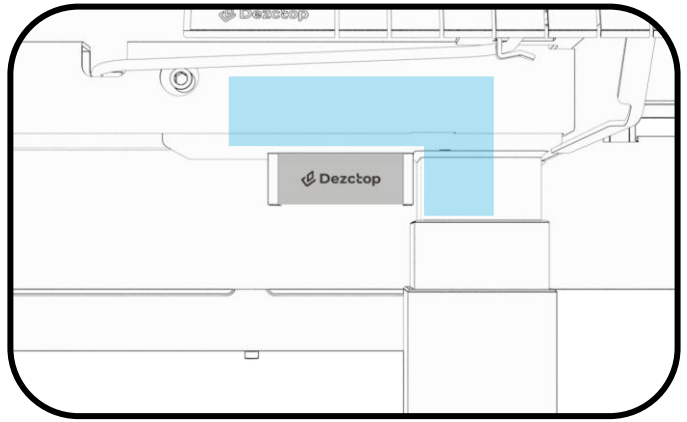

Align The Adapter Bracket

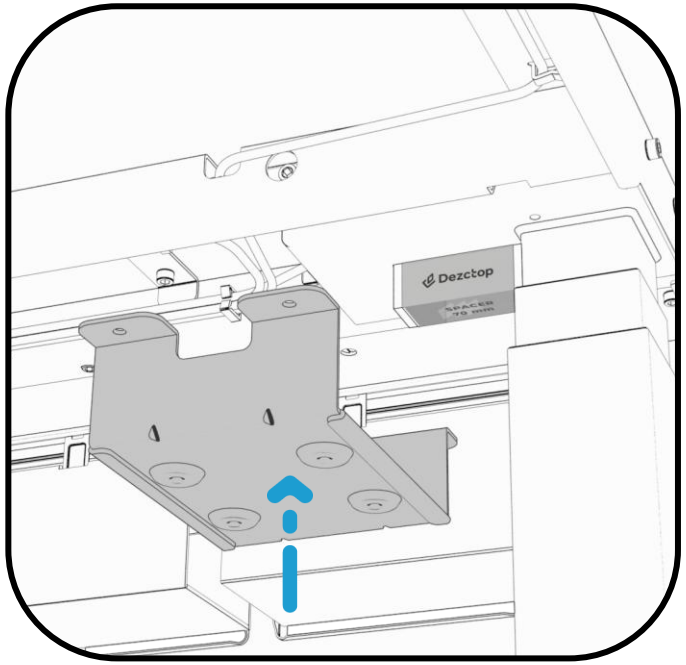

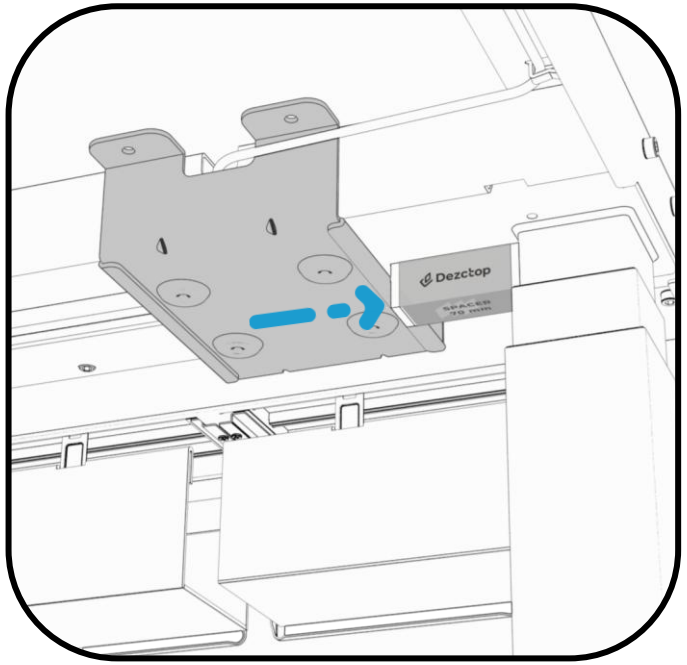

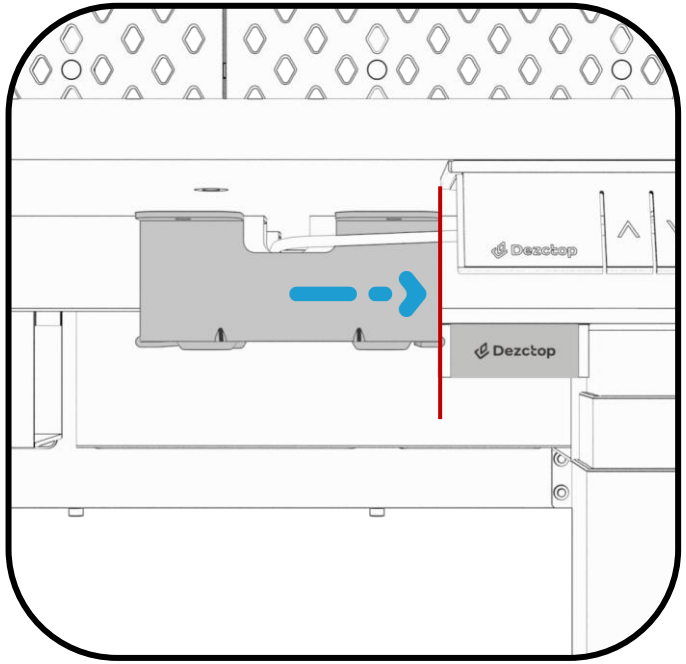

Mark And Drill In The Tabletop

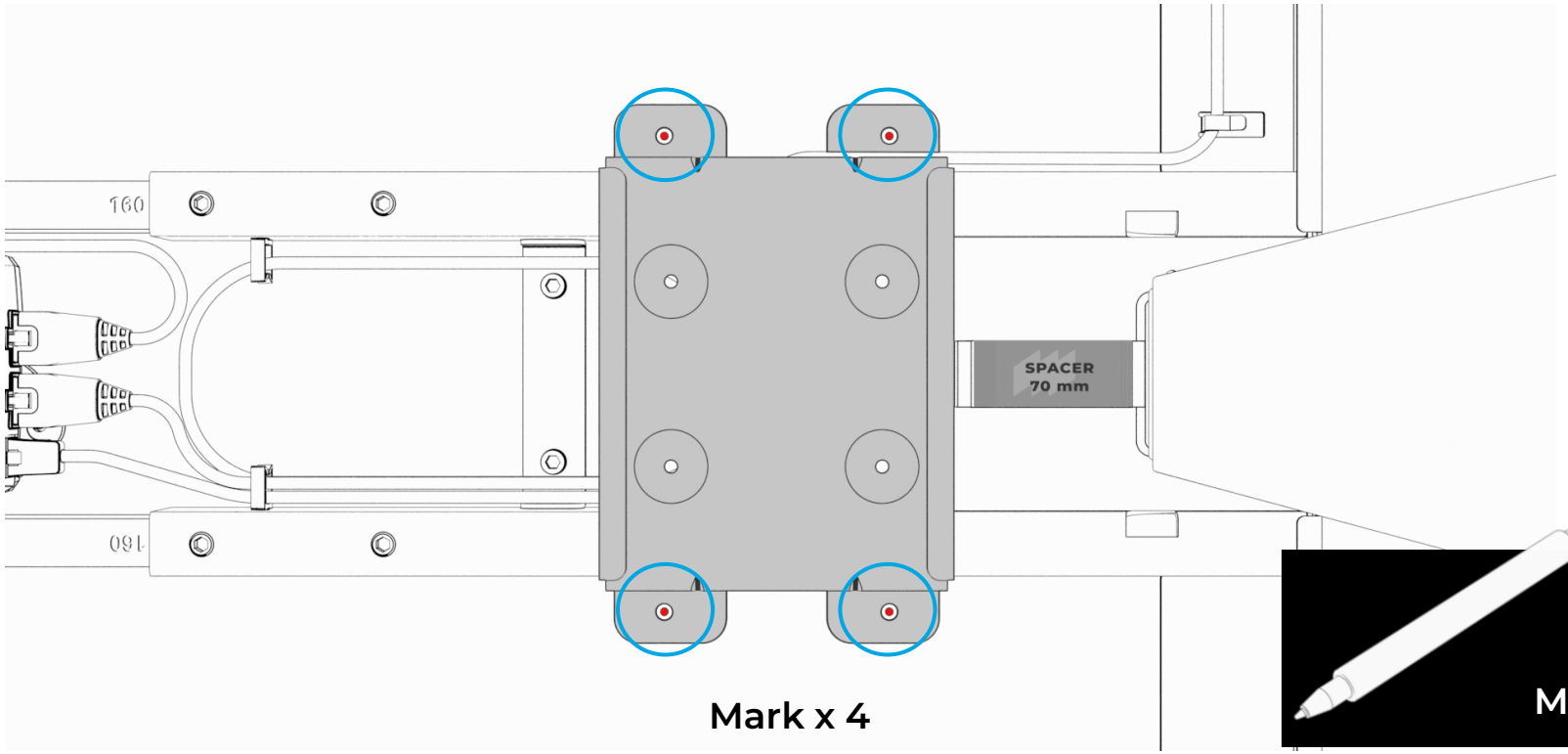

Mark x 4

Marker Pen

Mark And Drill In The Tabletop

Electric Drill

3.5mm Drill Bit

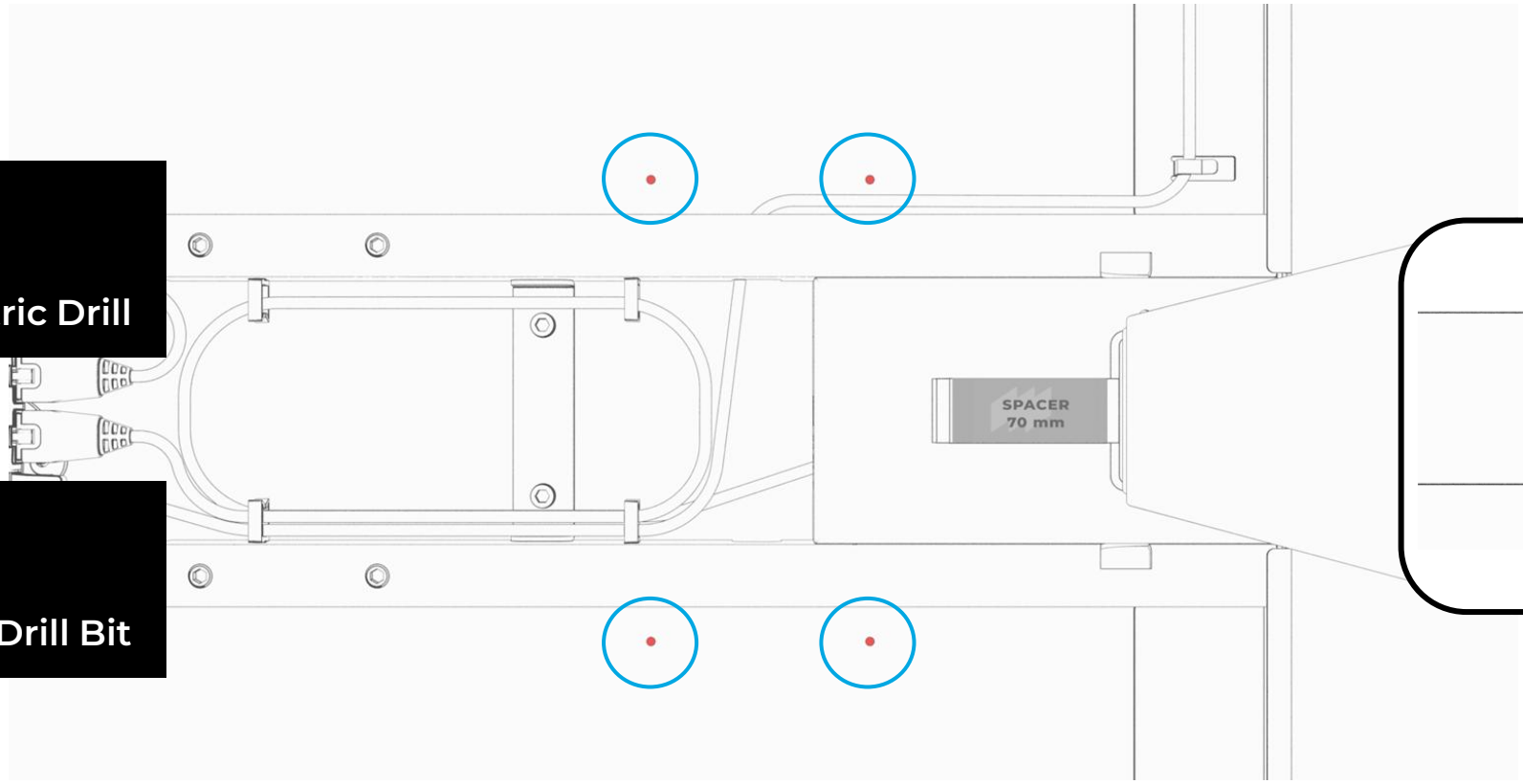

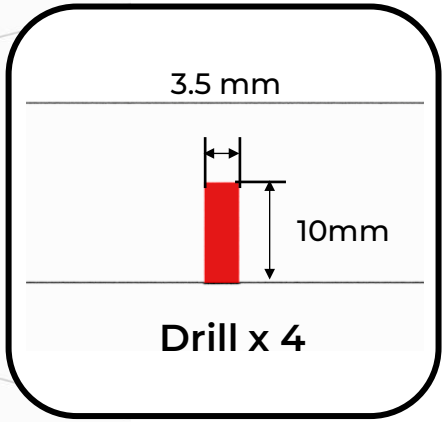

Mount The Adapter Bracket

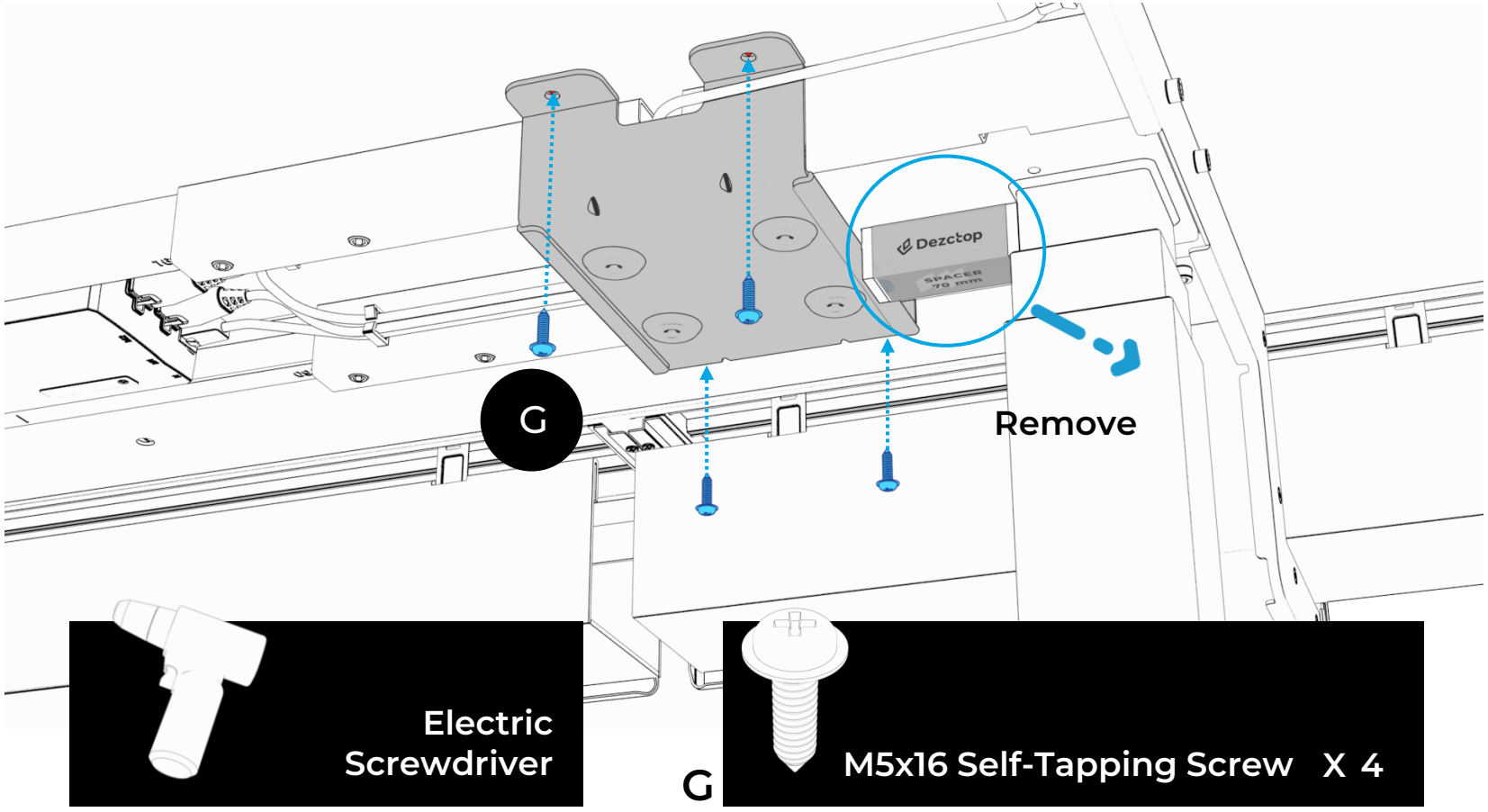

Mount The Mounting Bracket

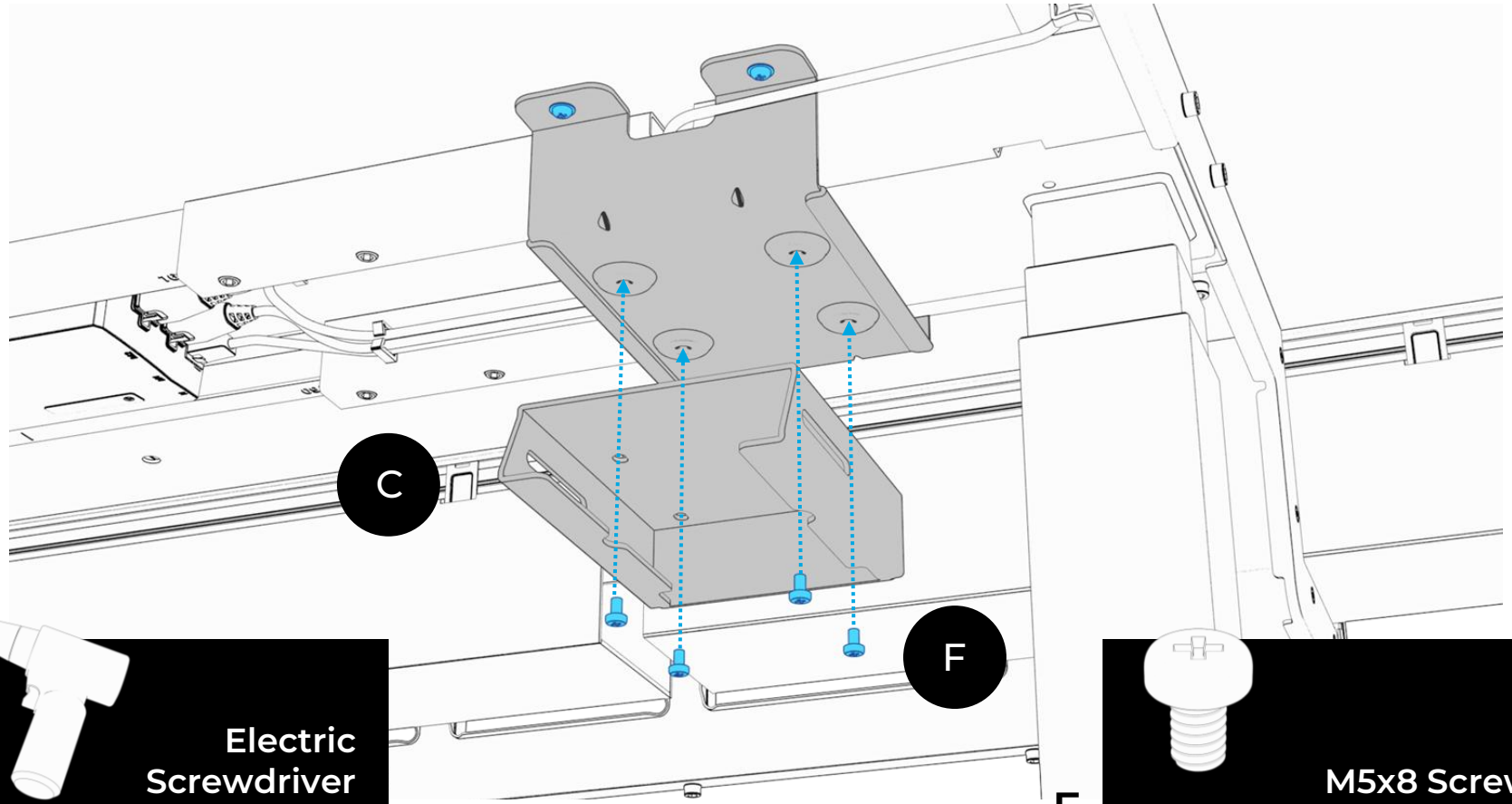

Electric Screwdriver

F

M5x8 Screw X 4

5.1 On Dezctop Revon Desks | 5.2 On Dezctop Bifrost Elite / Pro and General Standing Desks | 5.3 On Dezctop Bifrost 160 / 120 Desks | 5.4 On Other Desks

Mount The Mounting Bracket

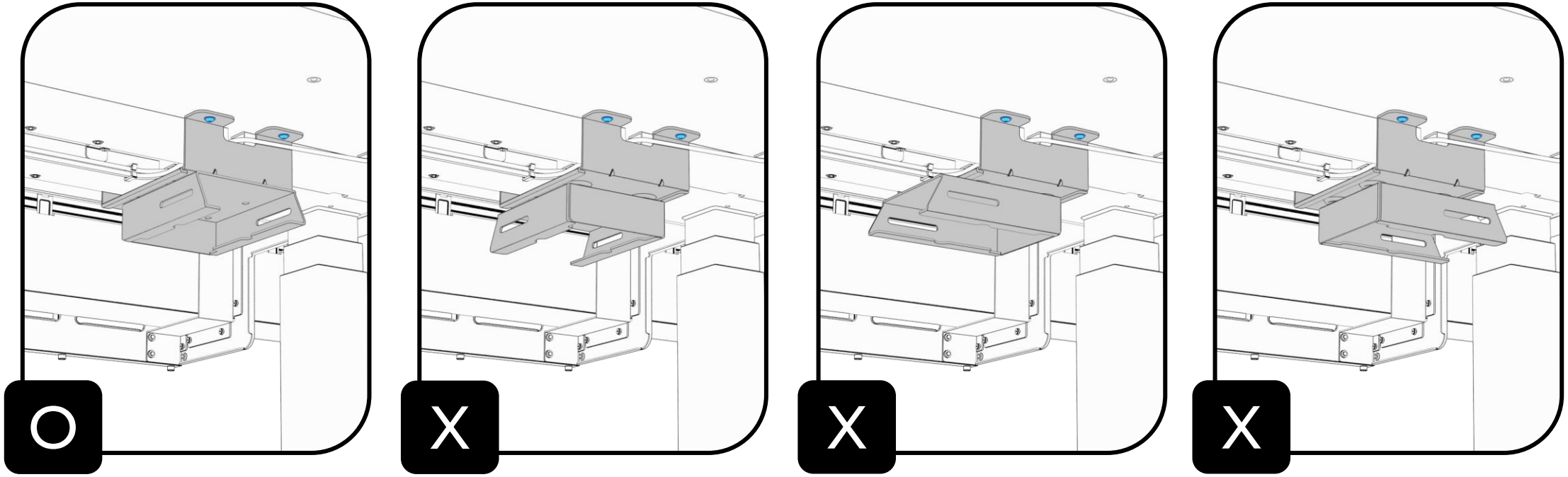

By The Leg

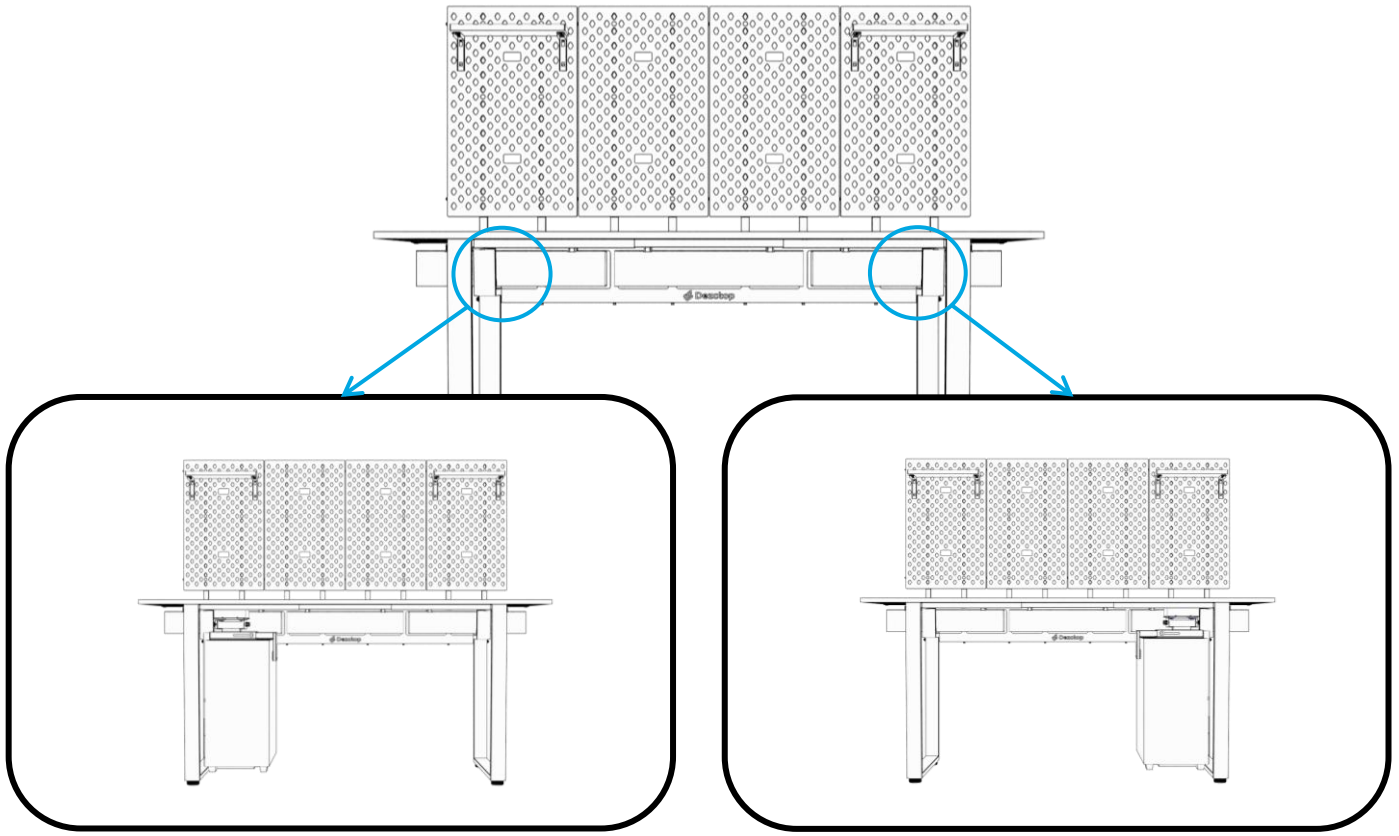

Put The Alignment Paper

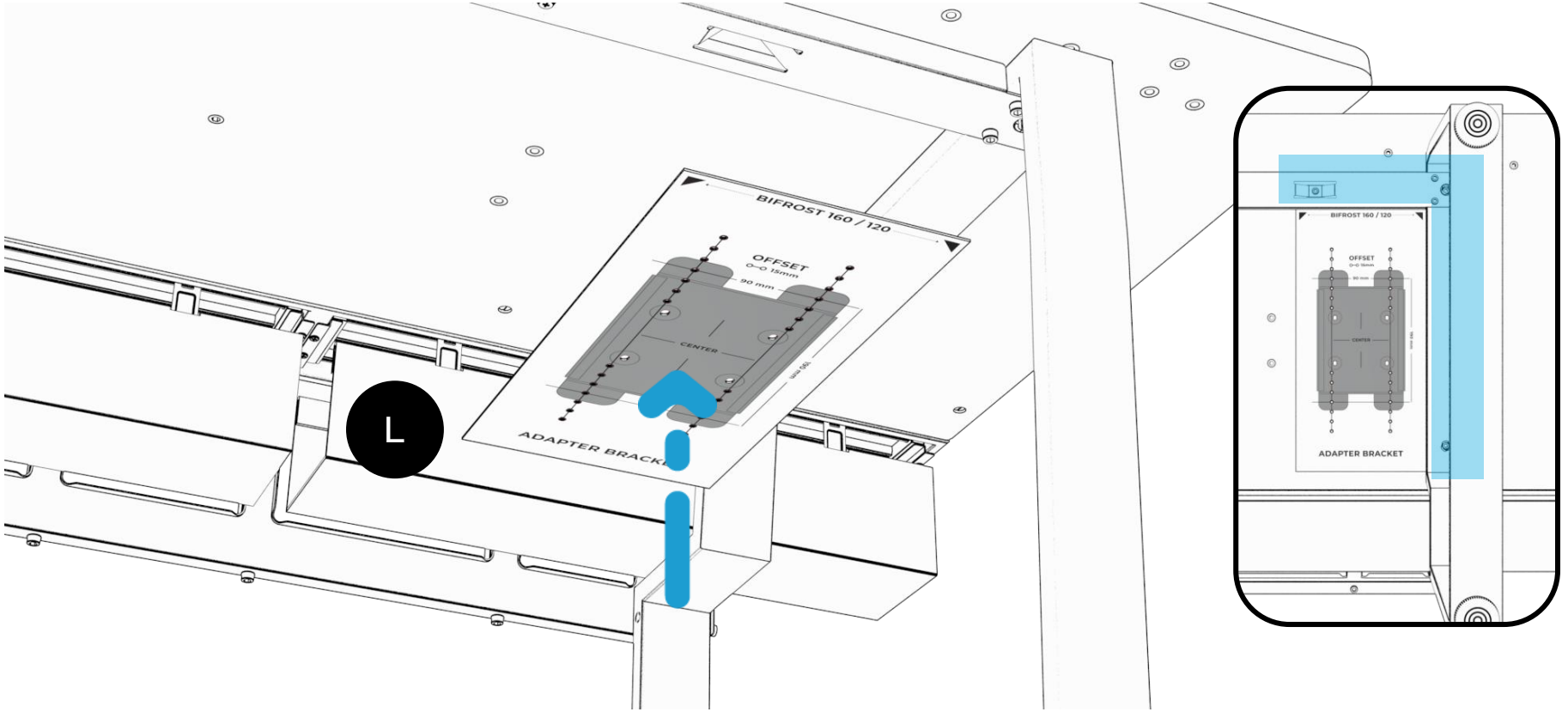

Mark And Drill In The Tabletop

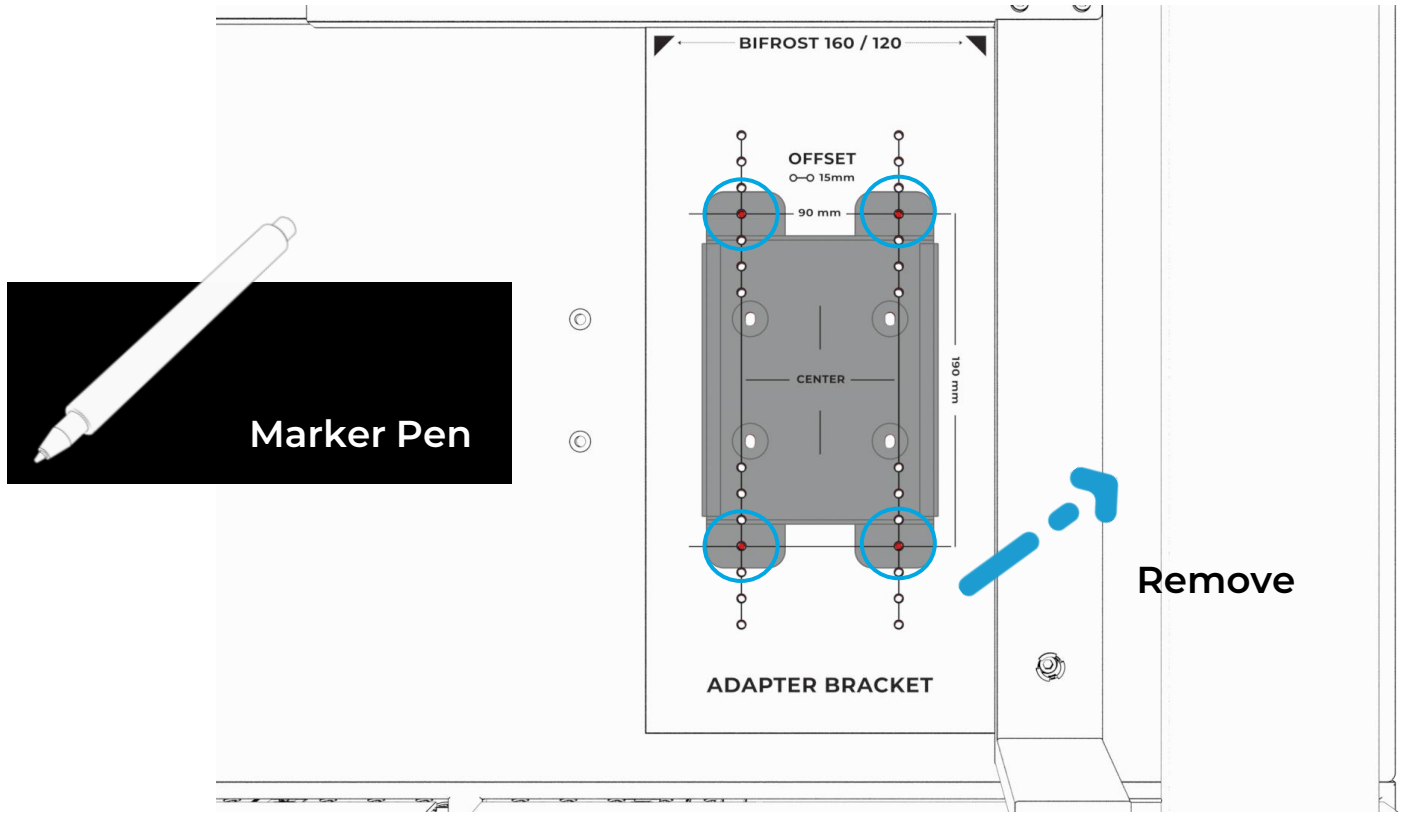

Mark x 4

Mark And Drill In The Tabletop

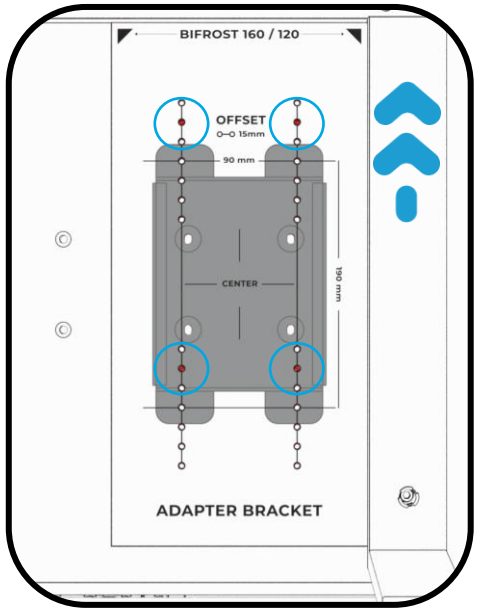

Forward

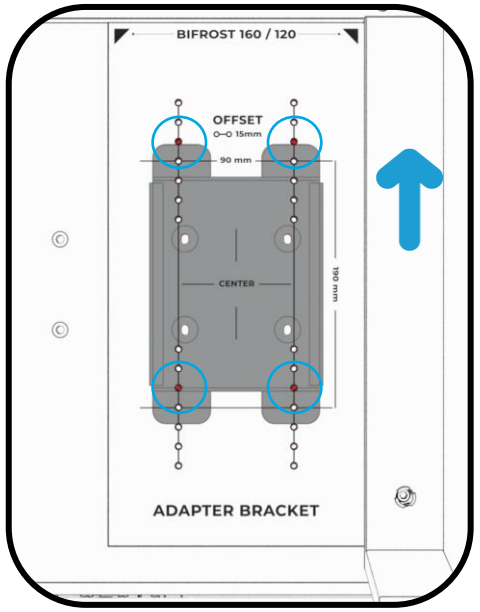

Forward

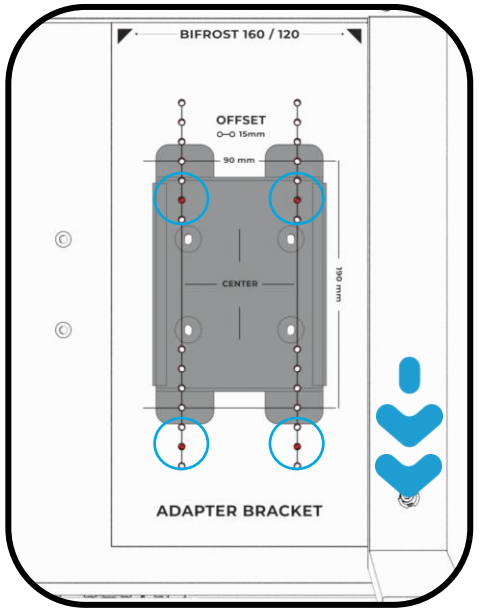

Backward

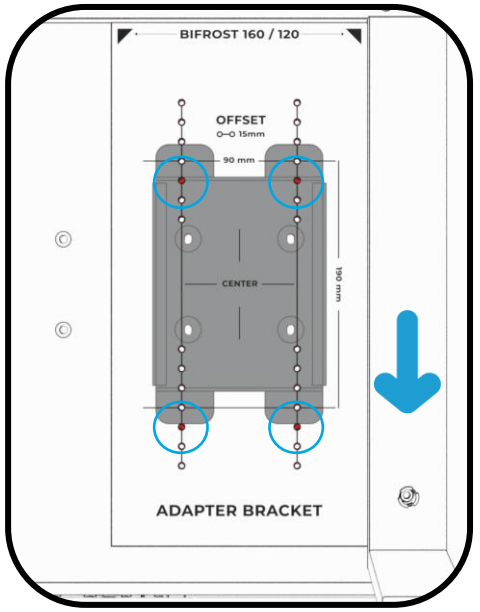

Backward

The marks represent the position of adapter bracket and the PC mount.
Adjust forward or backward according to your PC's size and preferred placement.

Mark And Drill In The Tabletop

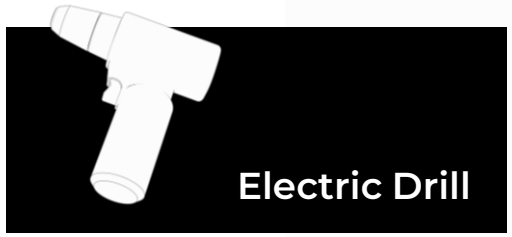

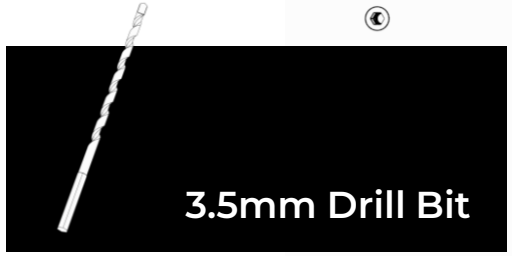

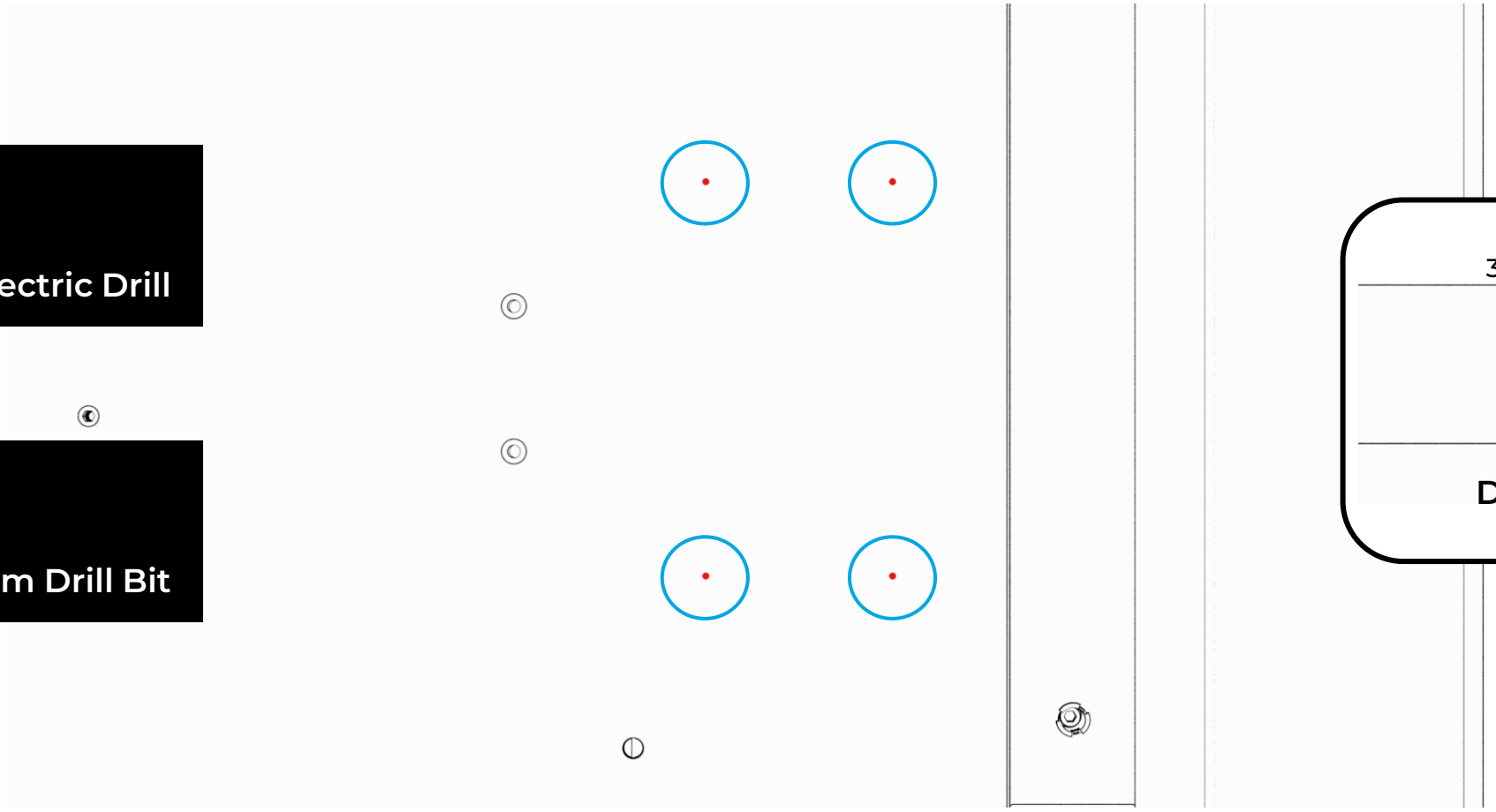

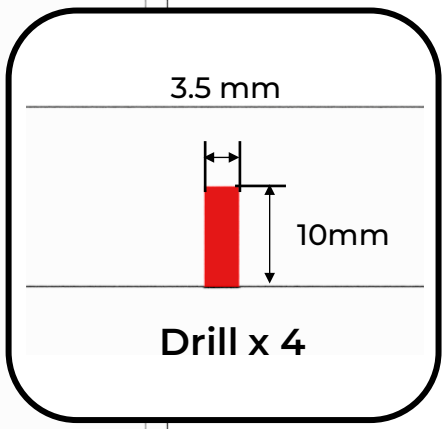

Mount The Adapter Bracket

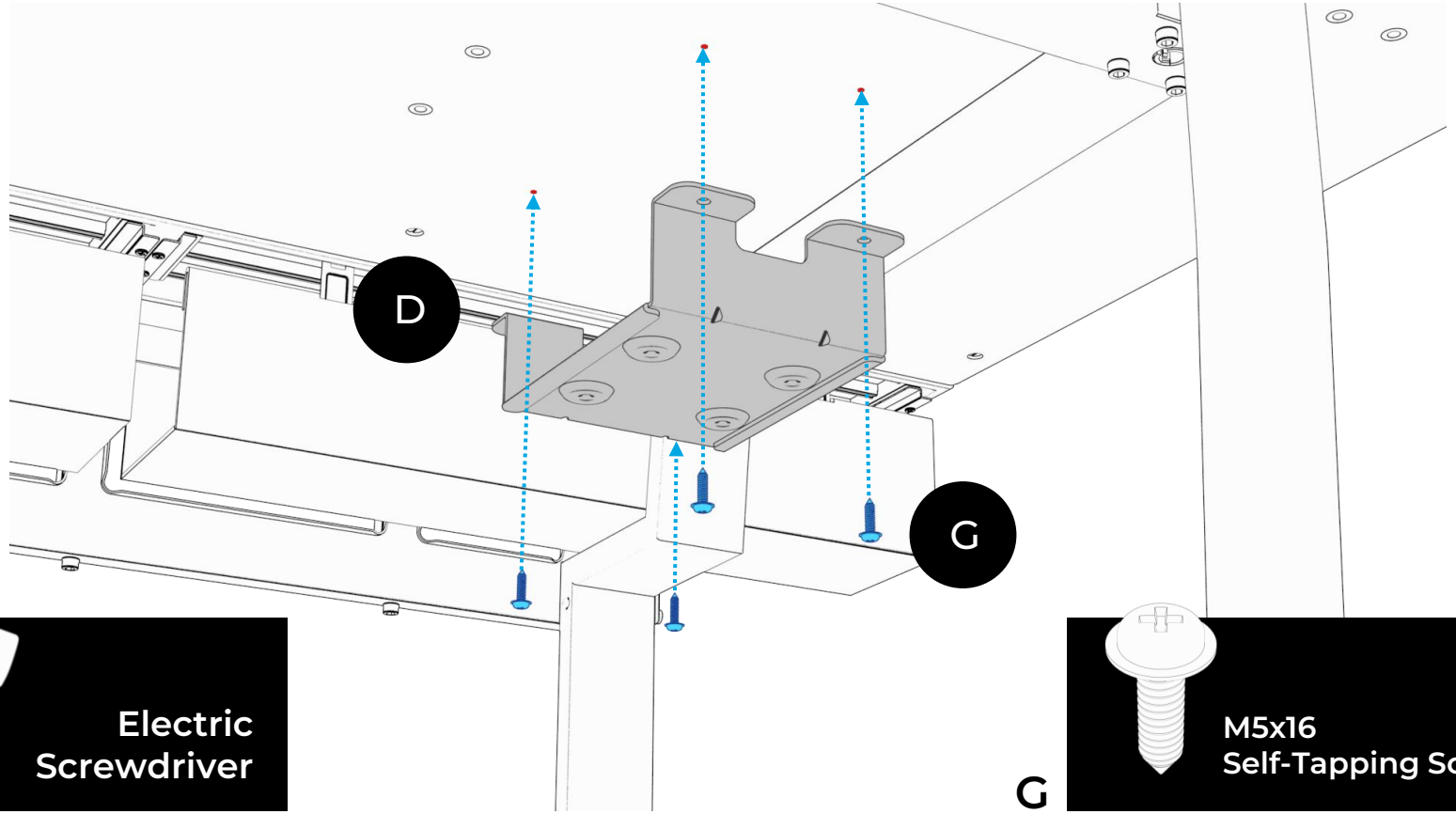

Electric Screwdriver

G

M5x16
Self-Tapping Screw X 4

Mount The Mounting Bracket

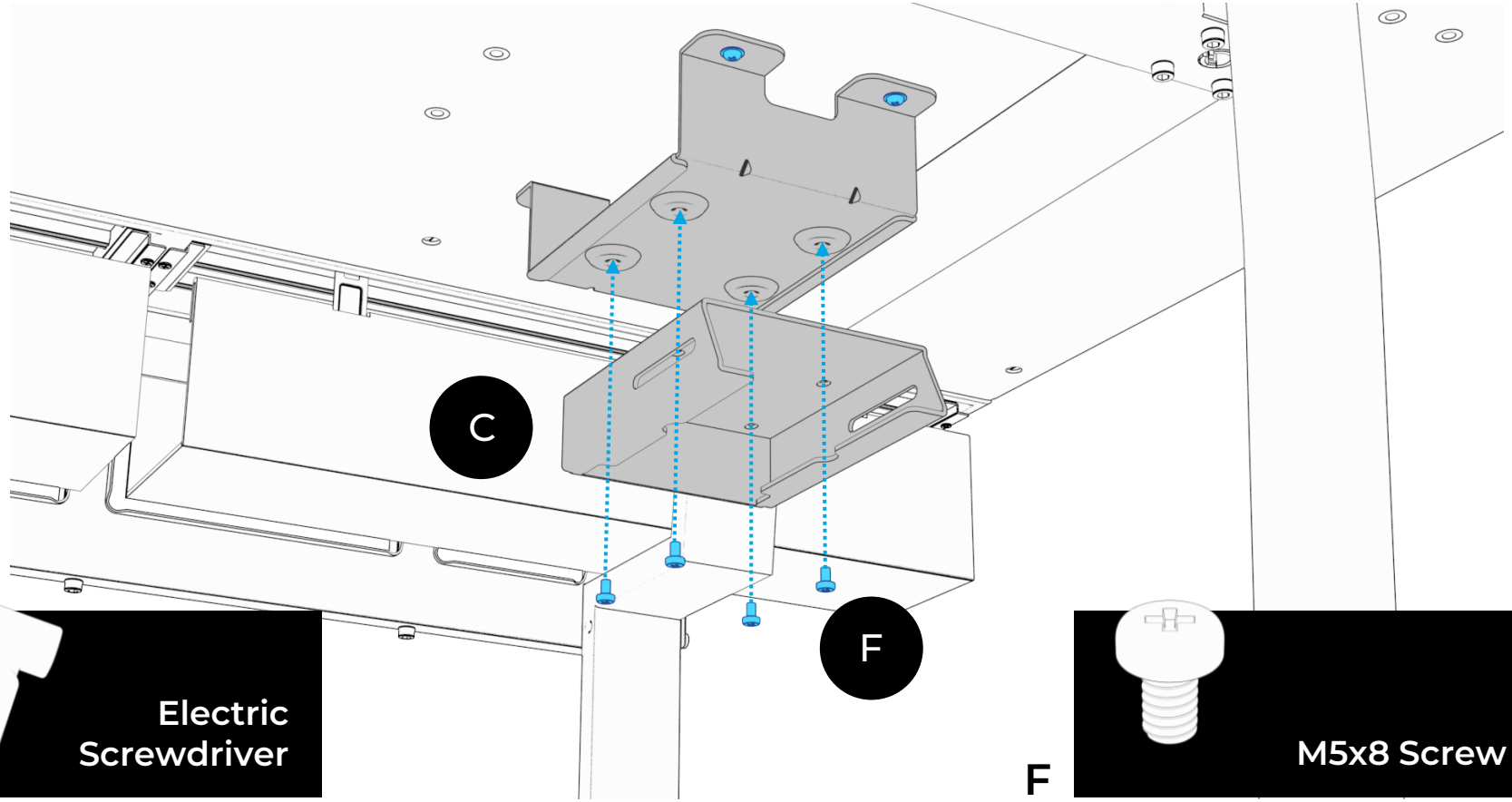

Electric Screwdriver

F

M5x8 Screw X 4

5.1 On Dezctop Revon Desks
5.2 On Dezctop Bifrost Elite / Pro and General Standing Desks
5.3 On Dezctop Bifrost 160 / 120 Desks
5.4 On Other Desks

Mount The Mounting Bracket

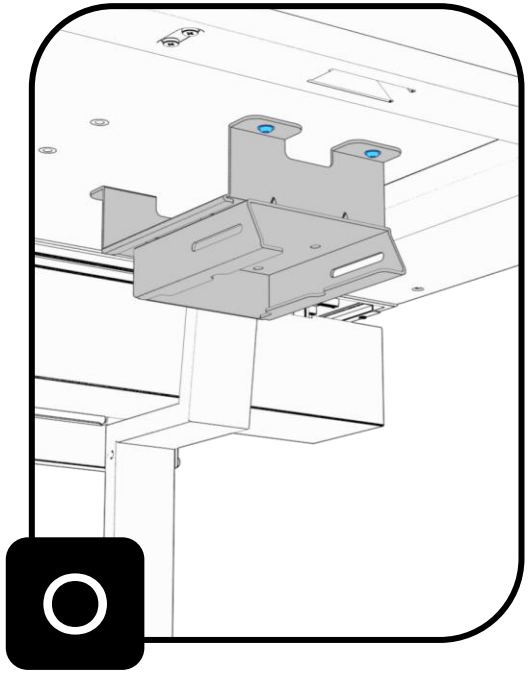

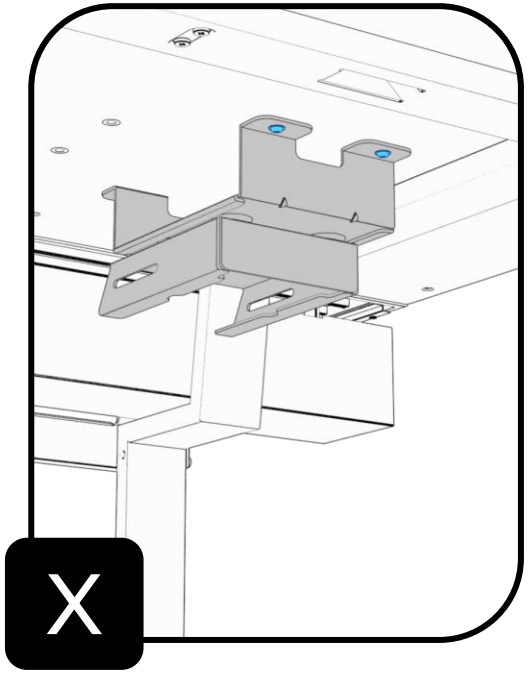

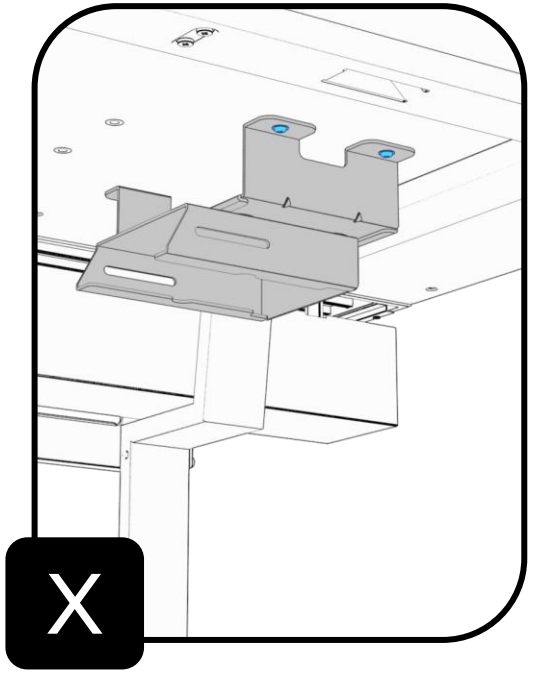

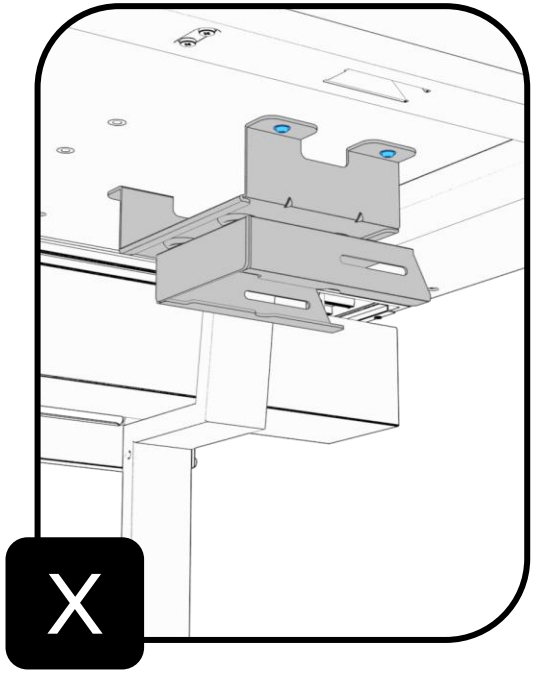

By The Leg

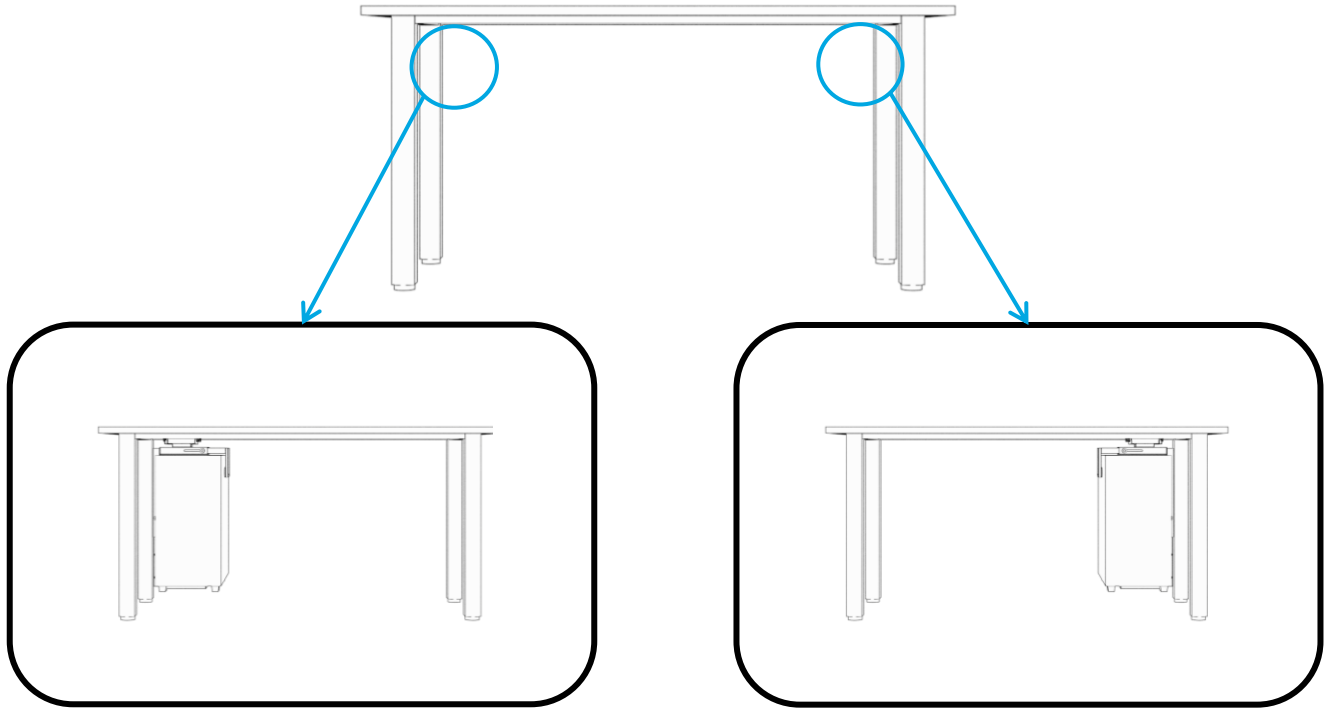

CAUTION!
The Thickness of Tabletop Must Exceed 18 mm.

Mount The Mounting Bracket

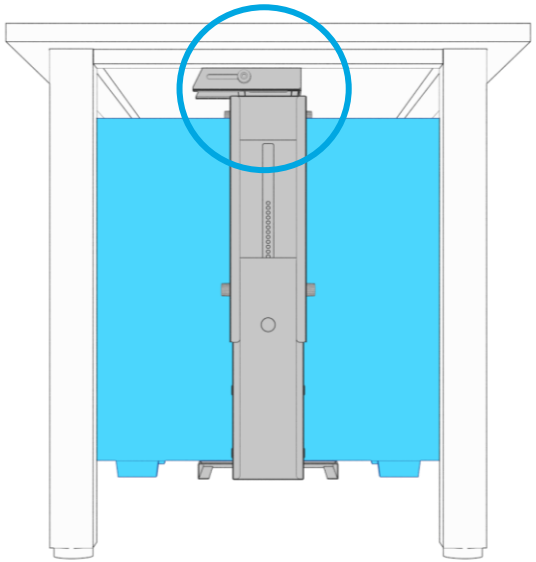

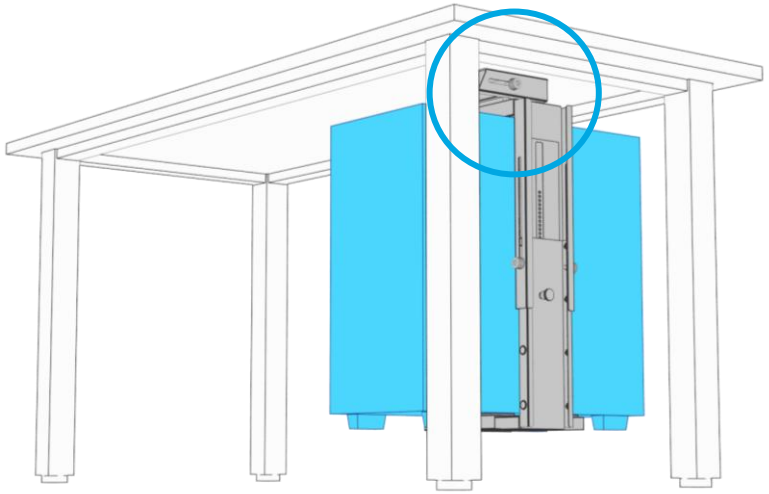

Before installing, check the space between the desk legs and frame. If the legs or frame block the side of the mounting bracket, use the mounting bracket together with the adapter bracket (see Step 5.3 for details). If there is enough clearance, you can install with the mounting bracket alone.

5.1 On Dezctop Revon Desks | 5.2 On Dezctop Bifrost Elite / Pro and General Standing Desks | 5.3 On Dezctop Bifrost 160 / 120 Desks | 5.4 On Other Desks

Position The Mounting Bracket

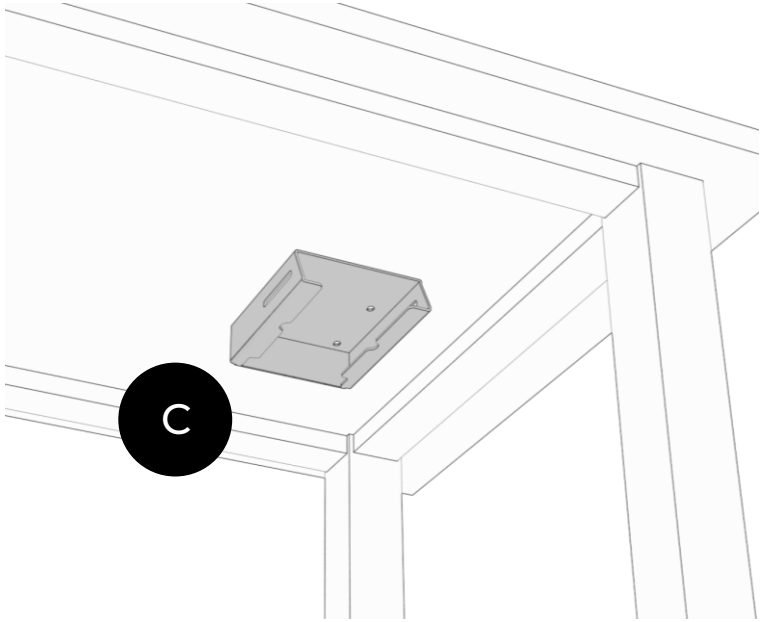

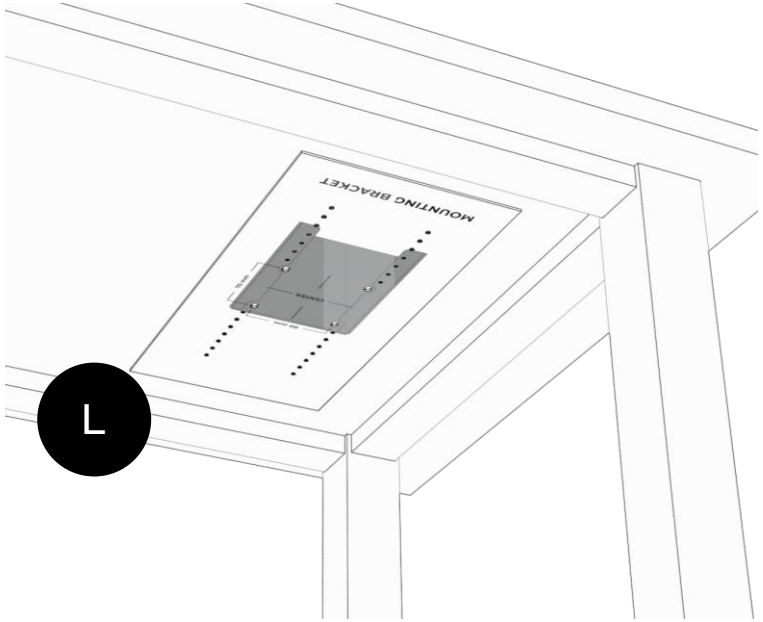

Position the mounting bracket appropriately by using the bracket or the alignment paper.

Mark And Drill In The Tabletop

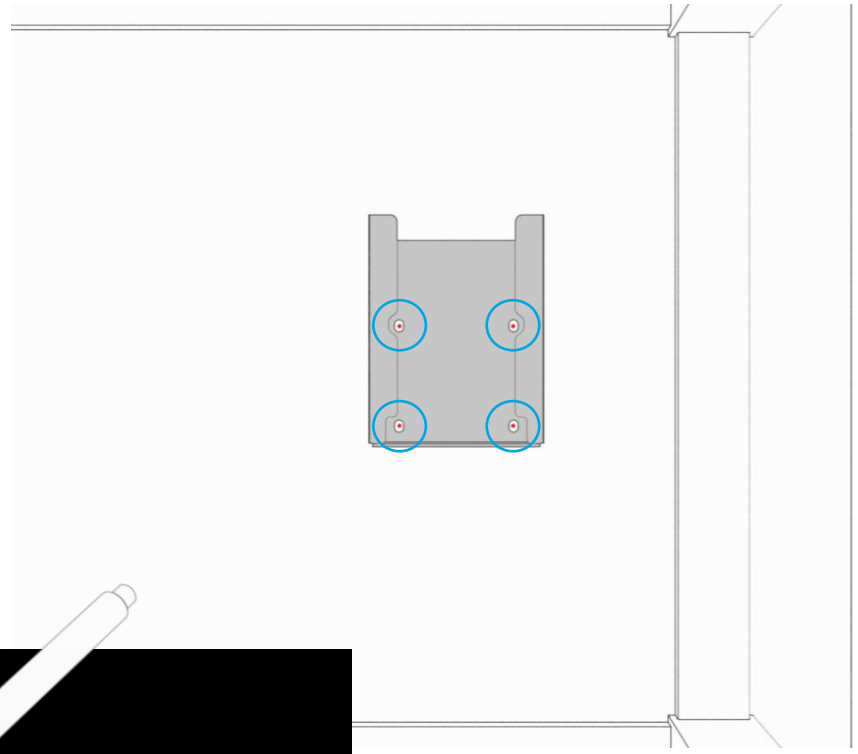

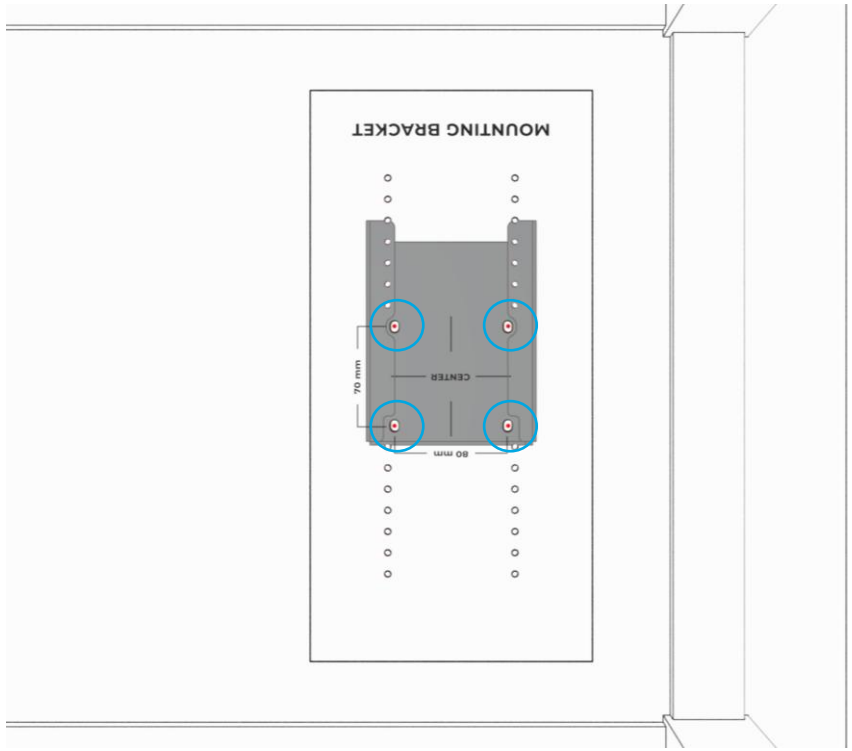

Mark x 4

5.1 On Dezctop Revon Desks | 5.2 On Dezctop Bifrost Elite / Pro and General Standing Desks | 5.3 On Dezctop Bifrost 160 / 120 Desks | 5.4 On Other Desks

Mark And Drill In The Tabletop

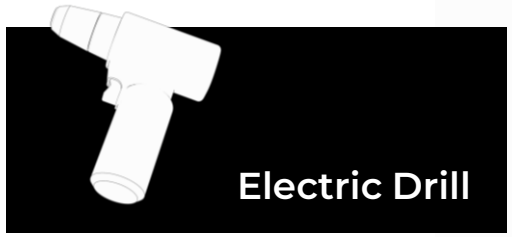

Electric Drill

3.5mm Drill Bit

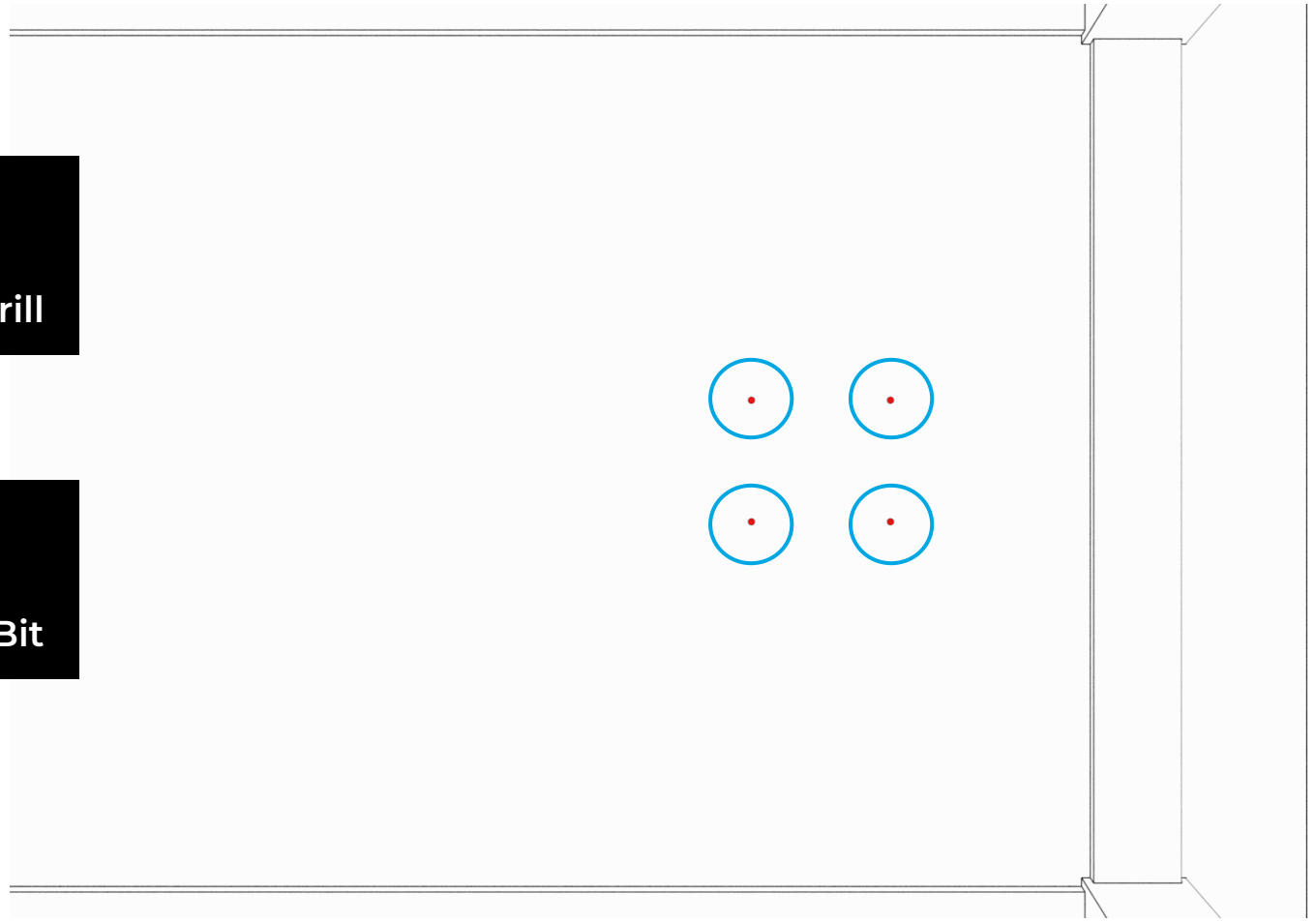

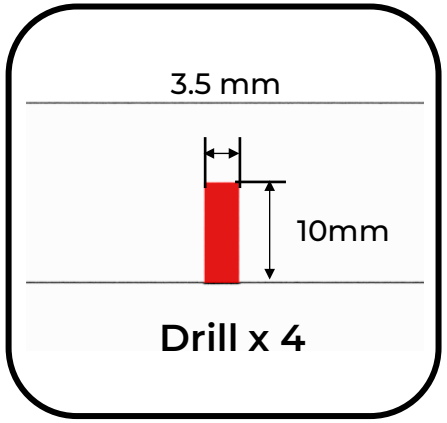

5.1 On Dezctop Revon Desks
5.2 On Dezctop Bifrost Elite / Pro and General Standing Desks
5.3 On Dezctop Bifrost 160 / 120 Desks
5.4 On Other Desks

Mount The Mounting Bracket

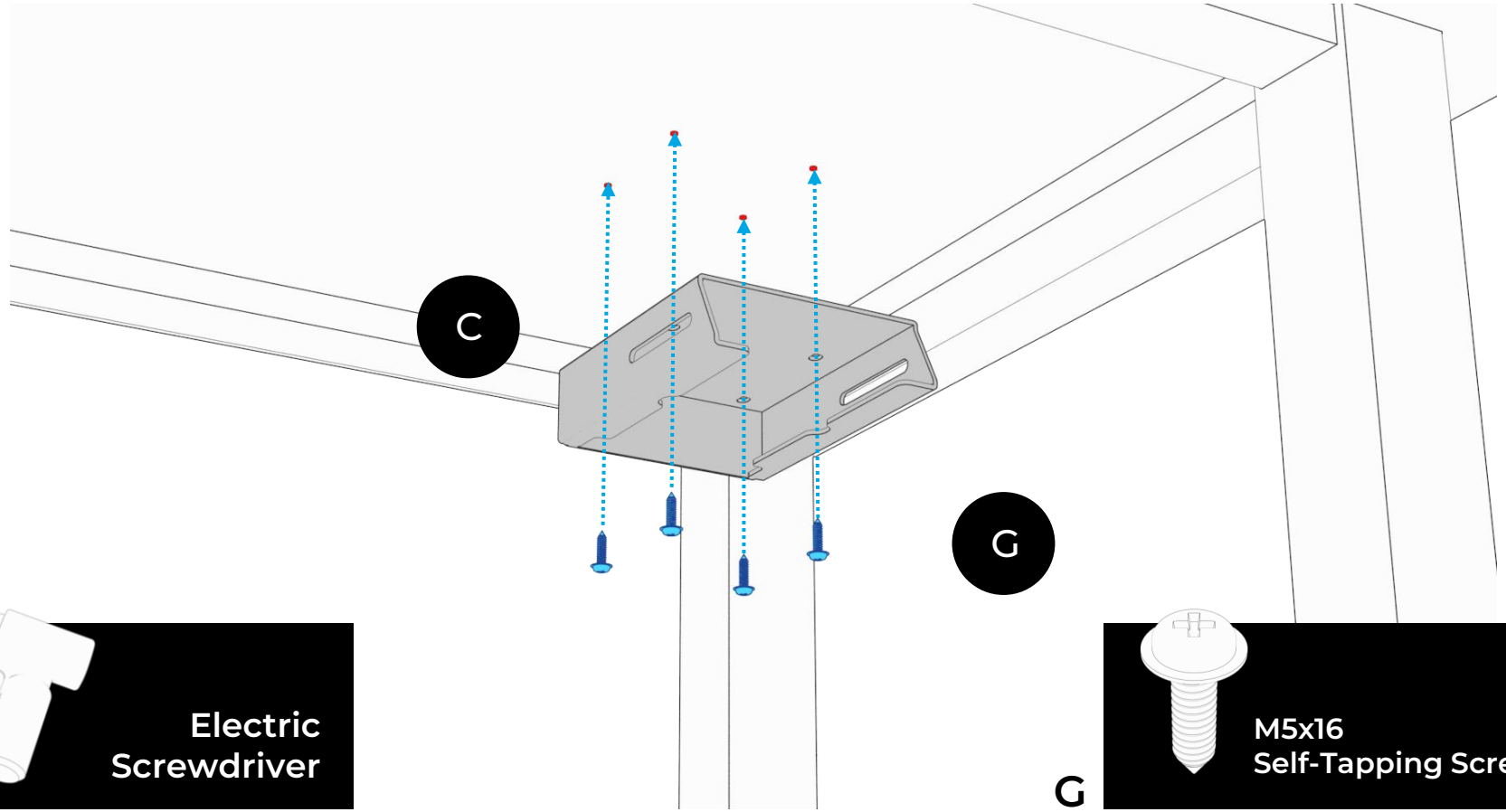

Electric Screwdriver

G

M5x16 Self-Tapping Screw X 4

5.1 On Dezctop Revon Desks
5.2 On Dezctop Bifrost Elite / Pro and General Standing Desks
5.3 On Dezctop Bifrost 160 / 120 Desks
5.4 On Other Desks

Mount The Mounting Bracket

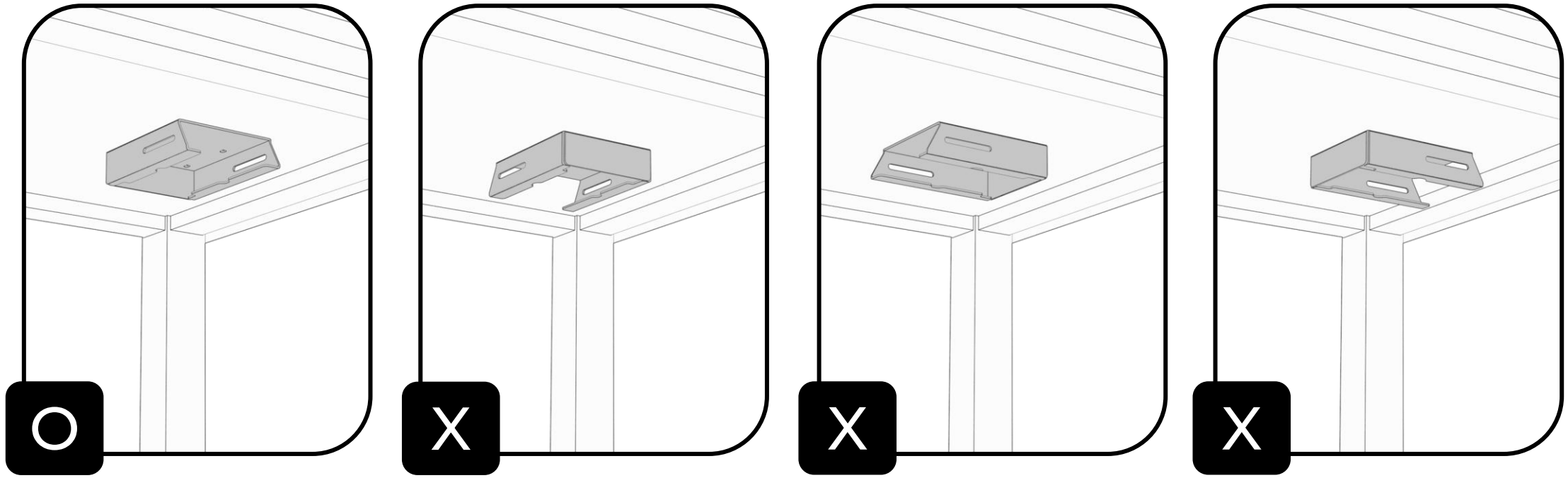

06

Install The PC Mount

6.1 Prepare The PC Mount P.46

6.2 Put The PC In The PC Mount P.49

6.3 Place The PC Mount Into The Mounting Bracket P.54

Assemble The Base

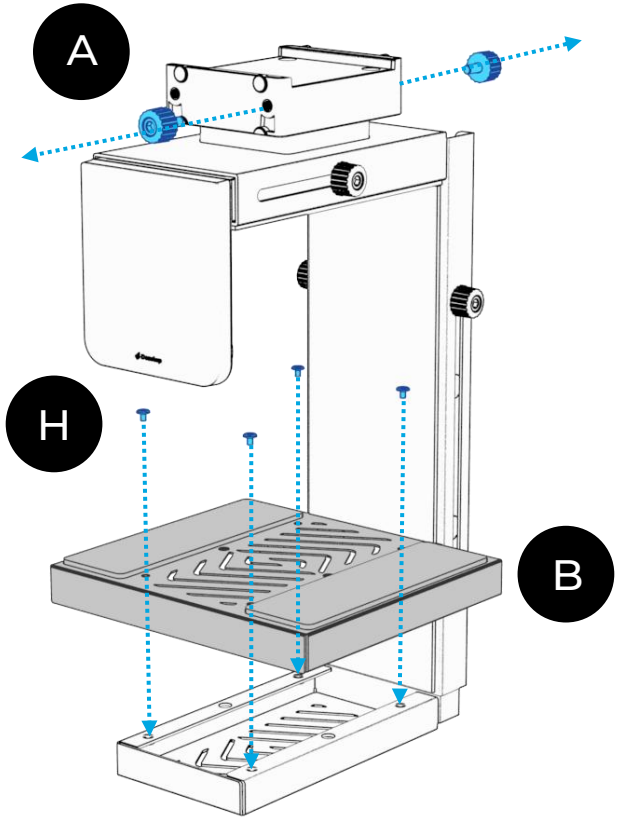

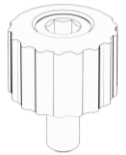

x 2 Keep

H M4x8 Screw X 4

Extend The PC Mount

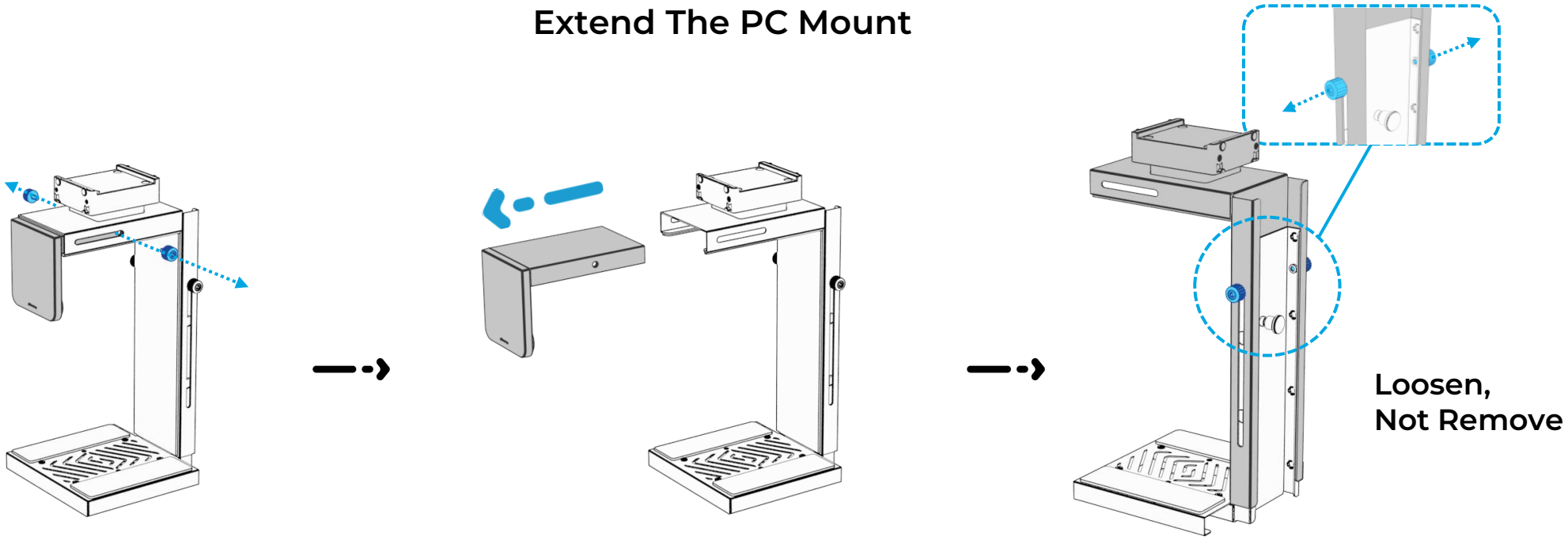

Loosen,
Not Remove

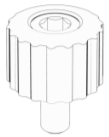

x 2 Keep

I

5mm Hex Key X 1

Extend The PC Mount

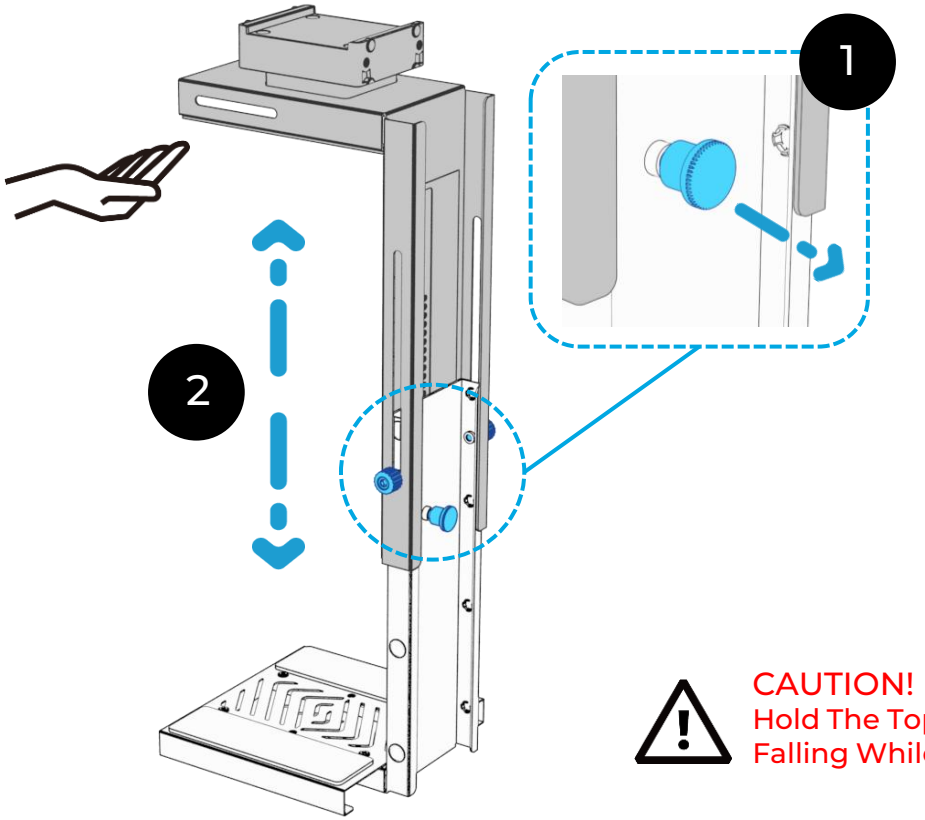

CAUTION!
Hold The Top Support To Stop Suddenly Falling While Pulling The Indexing Plunger.

Put The PC In

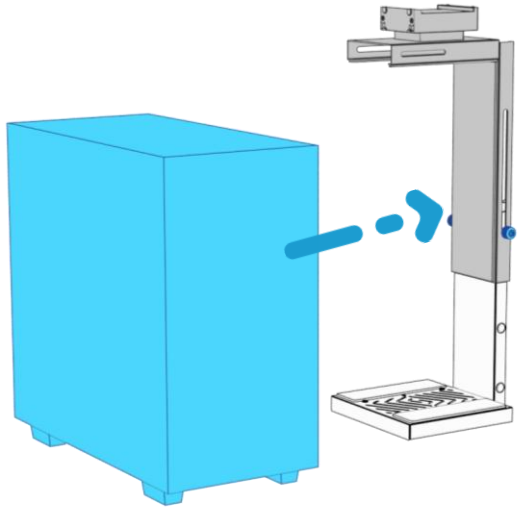

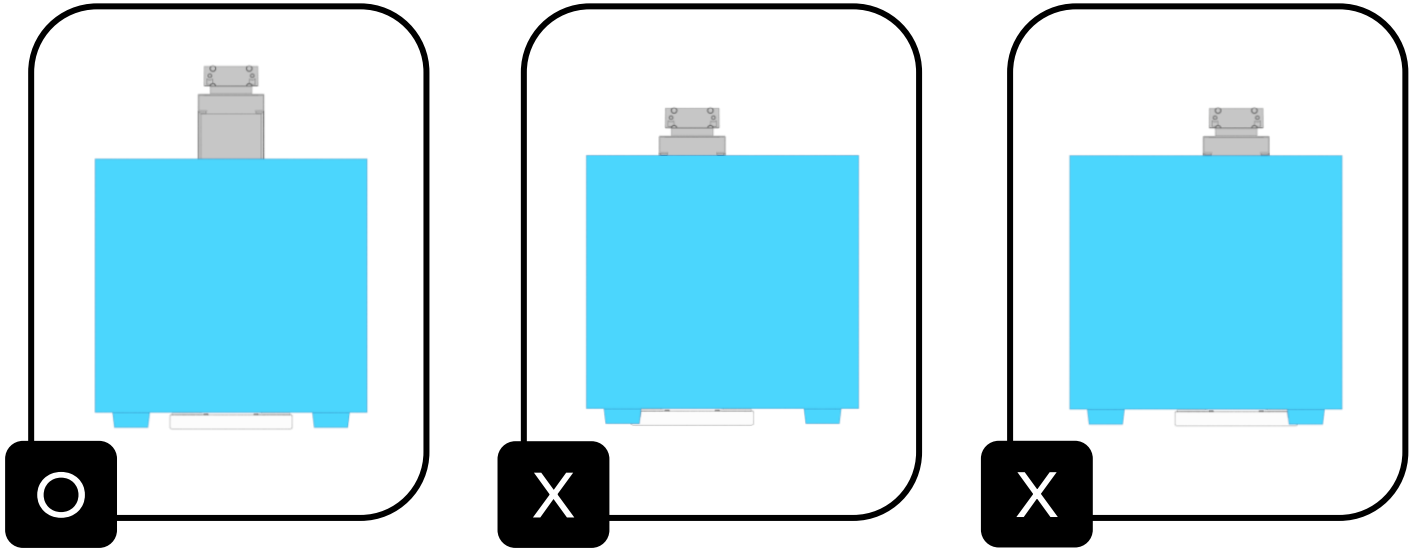

Put The PC In

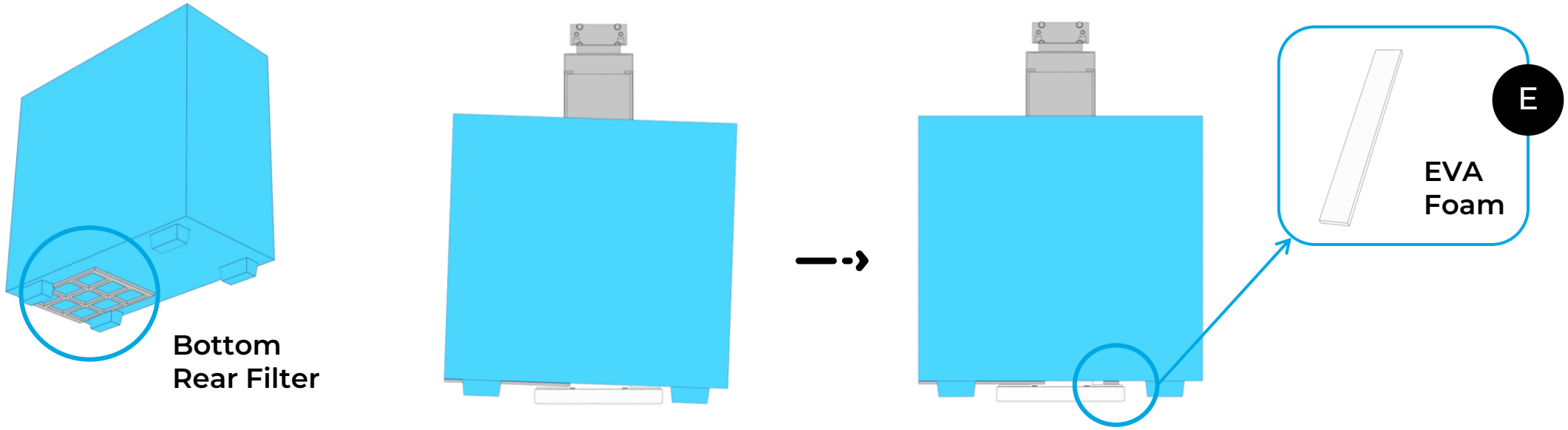

Some PC cases have bottom rear filter would cause the cases uneven.

Place the EVA foam between the PC case And the PC mount’s base to fix .

Lower The Top Support

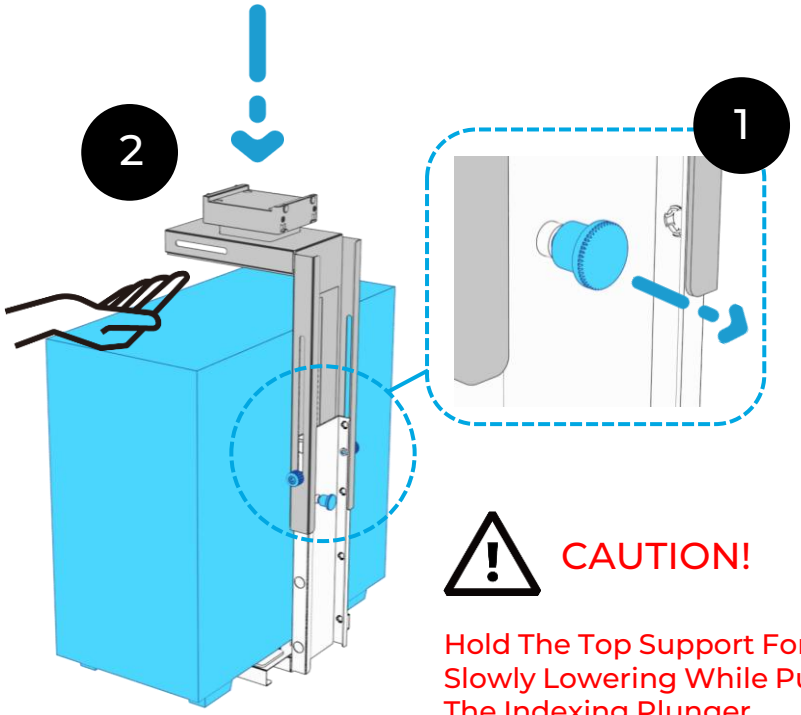

CAUTION!

Hold The Top Support For Slowly Lowering While Pulling The Indexing Plunger .

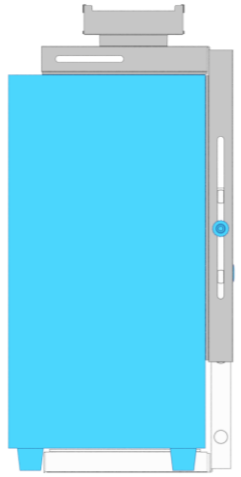

Make sure the PC mount closely fit the PC, both top and tight side.

6.1 Prepare The PC Mount
6.2 Put The PC In The PC Mount
6.3 Place The PC Mount Into The Mounting Bracket

Assemble The Side Support

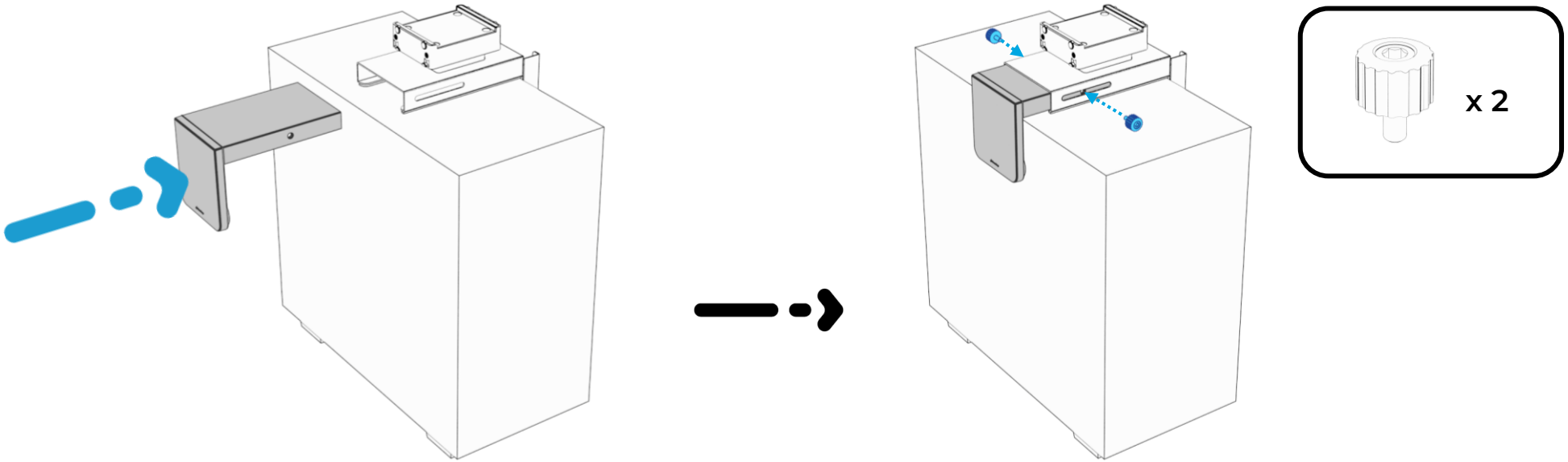

Tighten All Screws

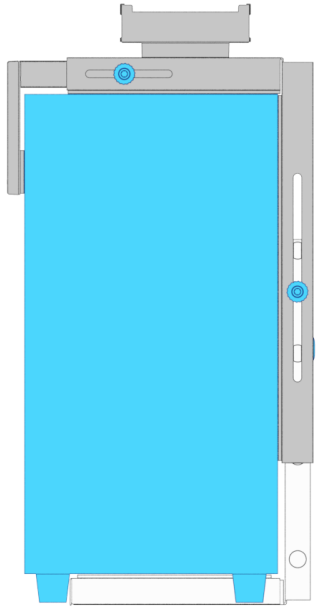

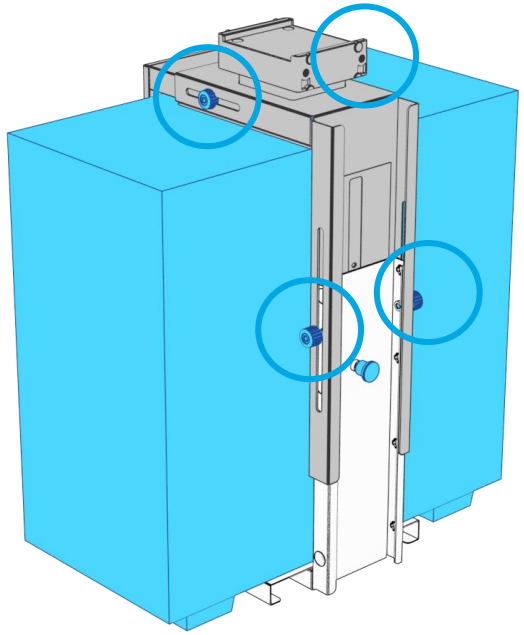

Make sure the PC mount closely fit the PC from all sides. And then tighten all screws.

6.3 Place The PC Mount Into The Mounting Bracket

For All Desks

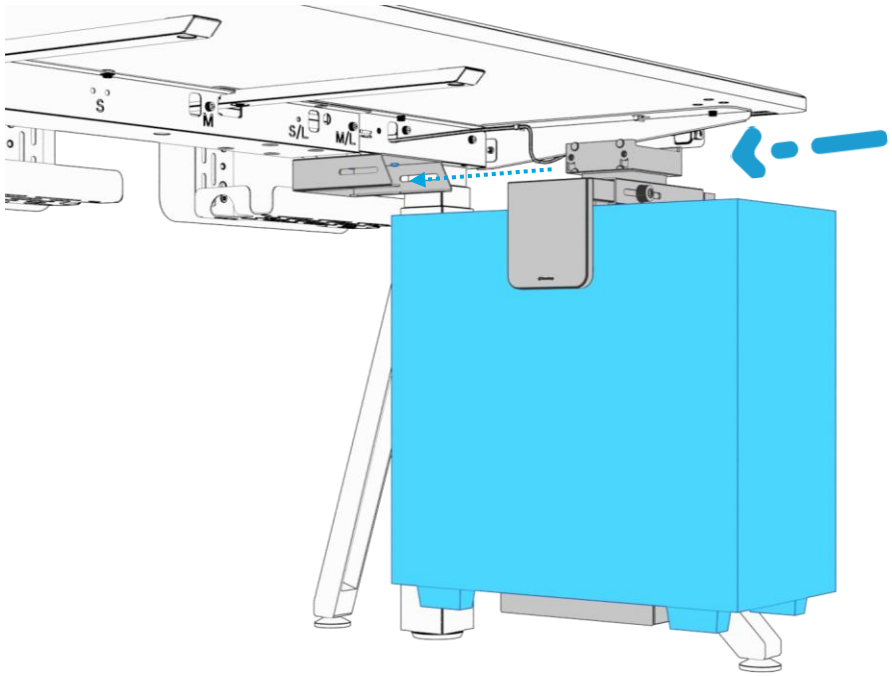

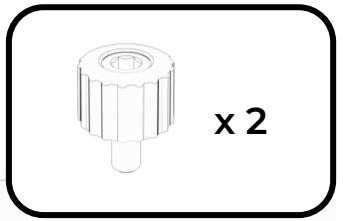

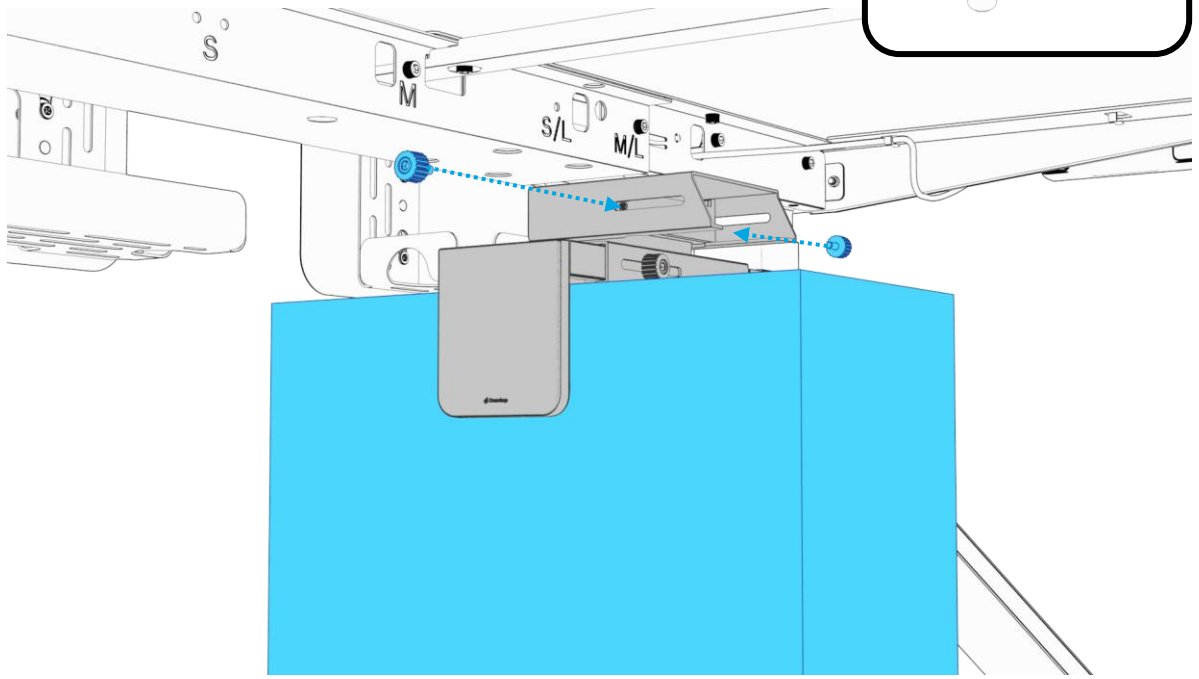

For All Desks

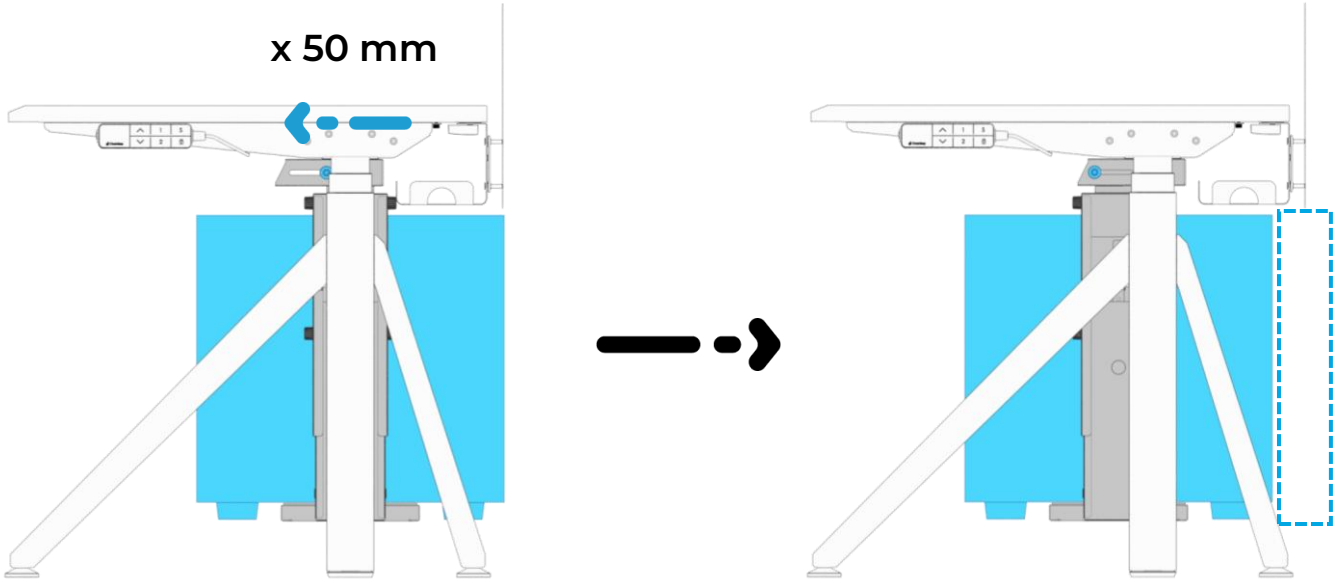

The PC mount can be moved forward up to 50mm that provide more space to connect cables of the PC.

6.3 Place The PC Mount Into The Mounting Bracket

For All Desks

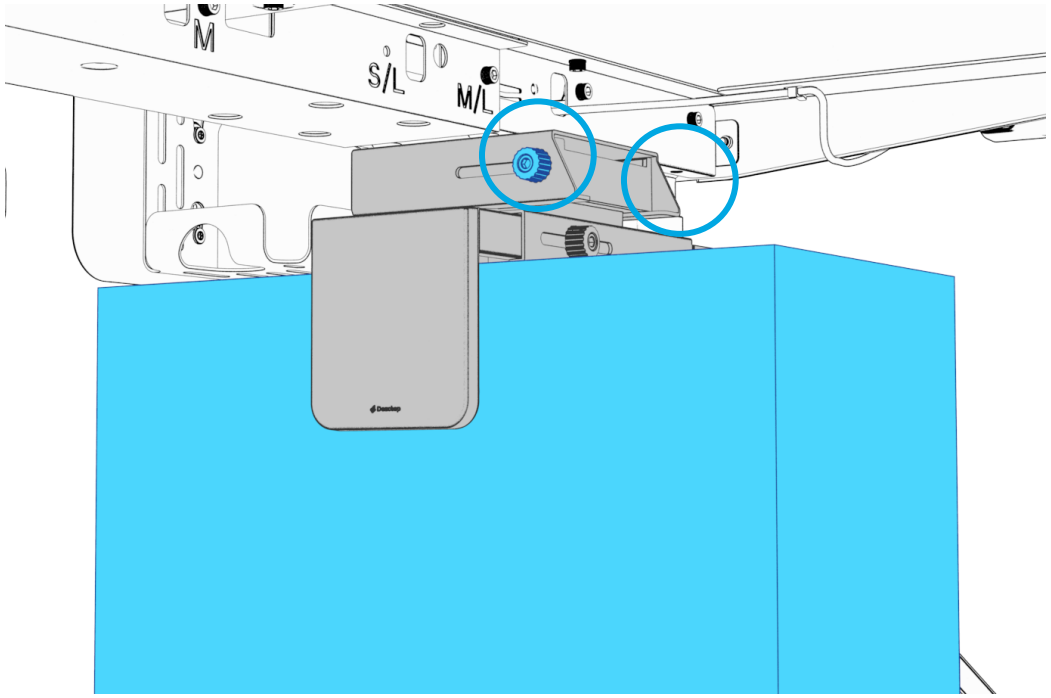

Tighten the screws to keep the PC mount steady while you finalize the position.

Set The Height Limit

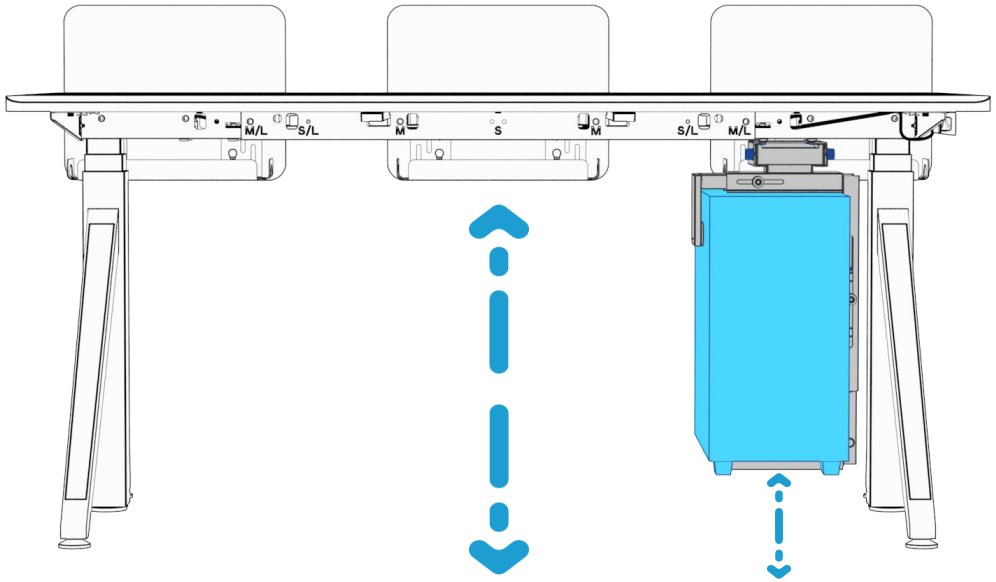

For safety, keep the bottom of the PC mount off the ground. Set the desk's lowest height limit based on the height of the PC mount and your PC case. This ensures the desk won't press against the PC case when lowering.

Recommended Height

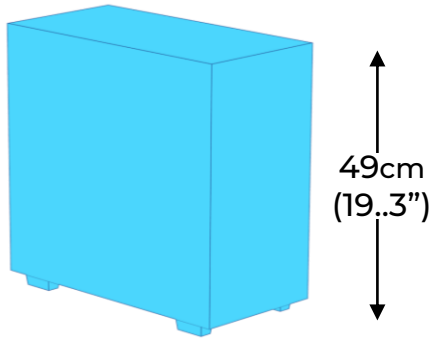

49cm
(19..3")

Bifrost Revon Desk :
Height of Desktop

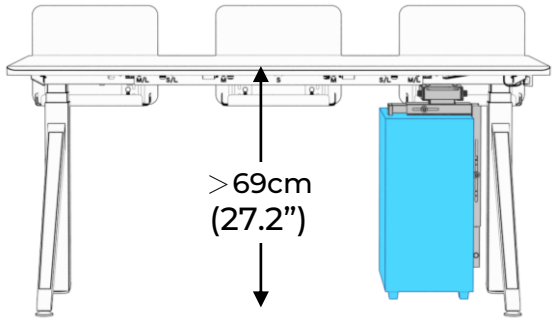

>69cm
(27.2")

Bifrost Elite/ Pro Desks :
Height of Desktop

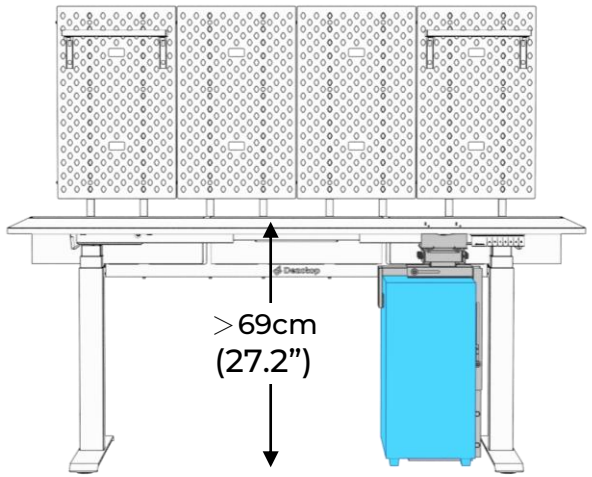

>69cm
(27.2")

Bifrost 160/ 120 Desks :
Height of Desktop

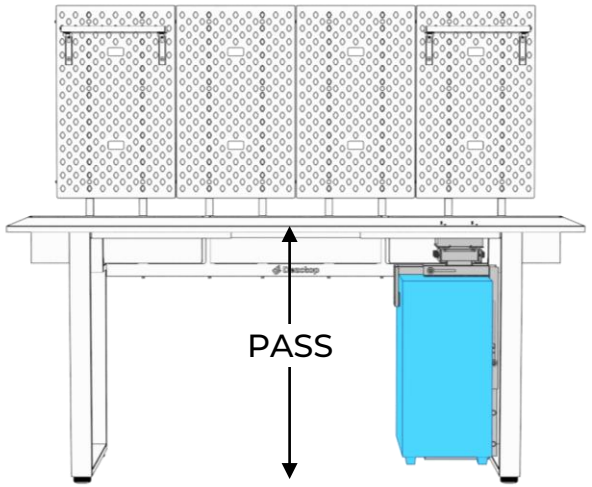

PASS

If you use the compatible largest PC case, please check the recommended height of the desktop.

You can lower the desk further if your PC case is smaller in size.

Recommended Height

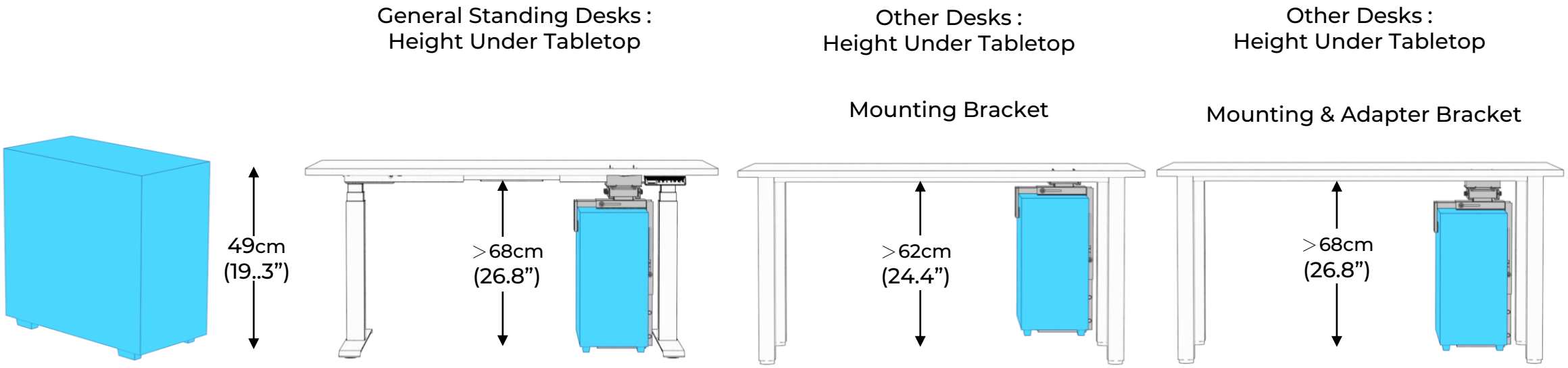

If you use the compatible largest PC case, please check the recommended height under the tabletop (since the tabletop’s thickness are variable).

You can lower the desk further if your PC case is smaller in size.